STATE LIBRARY OF PENNSYLVANIA
3 0144 00336056 7

S
620.6
En37p
v.44

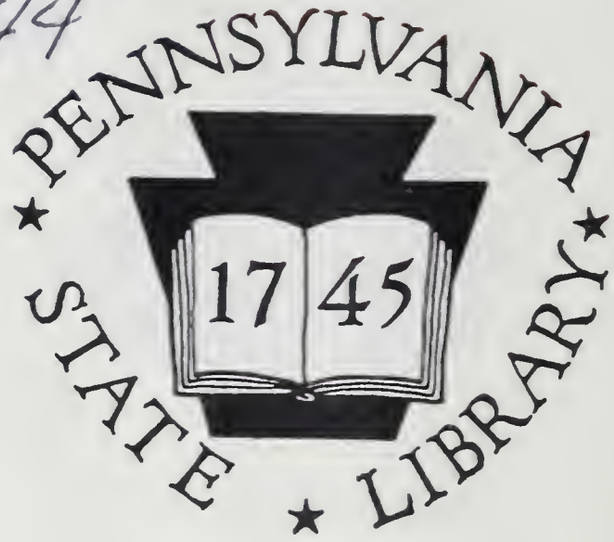

PROCEEDINGS

OF THE

ENGINEERS' SOCIETY OF WESTERN PENNSYLVANIA

VOLUME 44

FEBRUARY 1928—JANUARY 1929

PITTSBURGH
WILLIAM PENN HOTEL

1929

Copyright 1929
by the
Engineers' Society of Western Pennsylvania

PENNSYLVANIA
STATE LIBRARY

ENGINEERS' SOCIETY OF WESTERN PENNSYLVANIA

Incorporated 1880

OFFICERS FOR 1928

PRESIDENT ..... JOHN A. HUNTER

VICE-PRESIDENTS ..... JOHN N. CHESTER, W. L. AFFELDER

SECRETARY ..... K. F. TRESCHOW

TREASURER ..... A. STUCKI

DIRECTORS

H. N. EAVENSON, L. C. EDGAR ..... *Term expires 1929*

V. R. COVELL, A. C. FIELDNER ..... *Term expires 1930*

A. S. DAVISON, T. J. McLOUGHLIN ..... *Term expires 1931*

WILLIAM E. FOHL, GEORGE T. LADD ..... *Junior Past Presidents*

C. S. DAVIS, W. C. GOODWIN, L. J. KIEFER, G. E. DIGNAN, L. O. LOUGEE, G. F. SIEFERS, W. B. SKINKLE ..... *Section Chairmen*

233787

Proceedings of the Engineers' Society of Western Pennsylvania

Published by the Secretary under the direction of the Publication Committee
Published monthly except August and September
E. H. McClelland, Technical Editor

This publication is copyrighted. Reprints may be made on condition that the full title of paper, name of author, page reference, and date of publication in the PROCEEDINGS be given.

No paper read before the Society shall be published elsewhere before its appearance in the PROCEEDINGS, and no paper previously published shall be published in the PROCEEDINGS without authority from the Publication Committee.

All papers, upon their acceptance by the Publication Committee, become the property of the Society, and it lies within the discretion of the Committee to publish them in whole or in part. The Society, however, does not hold itself responsible for opinions expressed by its members.

The Society will mail to correspondents and advertisers—monthly, except August and September—the PROCEEDINGS, containing the minutes of meetings and the papers published.

An author is entitled to 25 copies of the PROCEEDINGS containing his paper. He may also have any additional number of copies at thirty cents each, provided they are ordered in advance of publication.

Copies of the PROCEEDINGS are for sale at the following prices:
Single copies, fifty cents each. Ten or more copies, thirty-five cents each. Complete volumes (17 to date), unbound, $5 each; cloth, $6.75 each.

The Secretary will quote prices for volumes 1, and 5 to 16; and for single numbers which are becoming scarce. Volumes 2 and 4 can not be furnished.

Rate of subscription, throughout the Postal Union, $5 a year; to colleges and public libraries, which agree to bind and catalogue, $3 a year.

By sending their unbound PROCEEDINGS to the Secretary, members may have volumes bound at the rate of $3 each.

CONTENTS

FEBRUARY, 1928

Recent Development in Steam Generation. *George T. Ladd* 1
Observations on Gas-Producer Operation. *Victor Windett* 11

MARCH, 1928

Engineering Analysis Applied to Municipal Waterworks. *William Shaw* 47

APRIL, 1928

Mine Locomotives for Gathering and Main-Line Haulage. *W. A. Clark* 87
Mechanical Loading of Coal in the Pittsburgh District. *L. E. Young* 97

MAY, 1928

Transportation of Coal by Belt Conveyors. *E. C. Auld* 117
Mine Locomotives for Gathering and Main-Line Haulage. *G. H. Shapter* 131

JUNE, 1928

Some Notes on the Loss of Pressure and Temperature in Cold-Blast Lines. *J. S. Fulton* 159
Additions and Alterations to the Store of the Kaufmann and Baer Company, now Gimbel Brothers, Inc., for the Estate of Henry W. Oliver. *C. S. Davis* 173

JULY, 1928

Study of Stresses by Means of Polarized Light and Transparencies. *R. V. Baud* 199

OCTOBER, 1928

Investigation of Electrical Equipment Used in Gassy Mines. *L. C. Ilsley* 233
The High-Pressure Power-Station. *Edward W. Norris* 250

NOVEMBER, 1928

Some Notes on the Coalescence of Non-Metallic Inclusions in Steel. *C. H. Herty, Jr* 259
Development of Four-High Mills. *F. C. Biggert, Jr* 268

DECEMBER, 1928

Development and Application of Timken Roller-Bearings for Steel-Mill Equipment. *F. Waldorf* 283
Construction and Operation of Kathner Normalizing Furnaces. *C. P. Mills* 305

JANUARY, 1929

A Century of the Pittsburgh Waterworks. *E. E. Lanpher* 331
Statistics of Typhoid Fever in Pittsburgh. *C. F. Drake* 347

AUTHOR INDEX

Auld, E. C. 117
Baud, R. V. 199
Biggert, F. C., Jr. 268
Clark, W. A. 87
Davis, C. S. 173
Drake, C. F. 347
Fulton, J. S. 159
Herty, C. H. Jr. 259
Ilsley, L. C. 233
Ladd, George T. 1
Lanpher, E. E. 331
Mills, C. P. 305
Norris, Edward W. 250
Shapter, G. H. 131
Shaw, William 47
Waldorf, F. 283
Windett, Victor 11
Young, L. E. 97

GENERAL INDEX

Additions and Alterations to the Store of the Kaufmann and Baer Company, now Gimbel Brothers, Inc., for the Estate of Henry W. Oliver. C. S. DAVIS. 173.
AFFELDER, W. L. Discussion of Coal-mining. 102, 154, 157.
AFFELDER, W. L. Discussion of Gas-producer. 44, 45.
Air preheater. 7.
Allegheny County Steam Heating Company. *See* Pittsburgh.
American Window Glass Company. Gas-producer operation. 12.
AULD, E. C. *Transportation of Coal by Belt Conveyors.* 117.
AUSTIN, W. M. Discussion of Stresses. 225.
BANKSON, E. E. Discussion of Pittsburgh waterworks. 85.
BAUD, R. V. *Study of Stresses by Means of Polarized Light and Transparencies.* 199.
Bearings. *See* Roller-bearings, *under* Rolling-mill.
BENTER, W. P. Discussion of Steel. 265.
BIGGERT, F. C., JR. *Development of Four-High Mills.* 268.
BIGGERT, F. C., JR. Discussion of Bearings. 298, 300.
BLAKESLEE, D. W. Discussion of Store building. 195.
Blast-furnace.
    Back-pressure. 169.
    Blowing. 170, 171, 172.
    Cold-blast lines. 159.
    Hot-blast lines. 168.
Blowing. *See* Blast-furnace.
BRIGHT, GRAHAM. Discussion of Coal-mining. 146, 151, 152, 155, 156, 157.
Brinell test. *See* Rolling-mill.
Building construction. *See* Store building.
BUSCHOW, E. Discussion of Normalizing furnace. 323, 324, 325, 326, 327, 328.
CANON, B. H. Discussion of Coal-mining. 106.
CARMODY, J. M. Discussion of Coal-mining. 155.
CARPENTER, C. A. Discussion of Pittsburgh waterworks. 79.
A Century of the Pittsburgh Waterworks. E. E. LANPHER. 331.
CHAPMAN, W. B. Discussion of Gas-producer. 34, 44.
CHESTER, J. N. Discussion of Pittsburgh waterworks. 341.
CHESTER, J. N. Discussion of Stresses. 227.
CHIDESTER, H. H. Discussion of Store building. 193, 195.
Circuit-breakers. *See* Electricity in mines.
CLARK, W. A. Discussion of Coal-mining. 157.
CLARK, W. A. *Mine Locomotives for Gathering and Main-Line Haulage.* 87.
Coal conveyors.
    Belt. 117.
        Economy. 128, 130.
        Safety. 119.

Coal-mining.
Electrical equipment. *See* Electricity in mines.
Haulage.
Electric locomotive. *See* Electricity in mines.
Mules. 87, 99, 156.
Track. 151, 154, 156.
Mechanical loading.
Pittsburgh district. 97.
Thickness of seams. 98, 112, 114.
Coke. *See* Fuel, *under* Power-plant development.
Coke-oven gas. *See* Normalizing furnace.
Cold-blast lines. *See* Blast-furnace.
Concrete. *See* Store building.
Conduit. *See* Flexible conduit, *under* Electricity in mines.
Construction and Operation of Kathner Normalizing Furnaces. C. P. Mills. 305.
Costs. Pittsburgh waterworks.
Operation of existing plant. 50.
Rehabilitation vs. new construction. 47.
Crawford, L. F. Discussion of Coal-mining. 154.
Cutler, D. E. Discussion of Blast-furnace. 167, 169, 170.
Davis, C. S. *Additions and Alterations to the Store of the Kaufmann and Baer Company, now Gimbel Brothers, Inc., for the Estate of Henry W. Oliver.* 173.
Deoxidizers. *See* Steel.
Development and Application of Timken Roller-Bearings for Steel-Mill Equipment. F. Waldorf. 283.
Development of Four-High Mills. F. C. Biggert, Jr. 268.
Dignan, G. E. Discussion of Blast-furnace. 169.
Dignan, G. E. Discussion of Normalizing furnace. 325.
Dignan, G. E. Discussion of Rolling-mill. 278.
Dobrin, H. Discussion of Gas-producer. 37, 43.
Donaldson, J. A. Discussion of Coal-mining. 109.
Drake, C. F. *Statistics of Typhoid Fever in Pittsburgh.* 347.
Dunbar, F. B. Discussion of Coal-mining. 110.
Elasticity. *See* Stresses.
Electric lighting. *See* Store building.
Electric locomotive. *See* Electricity in mines.
Electric wiring. *See* Wiring, *under* Electricity in mines.
Electricity in mines. 233.
Circuit-breakers. 245.
Coal-mine equipment. 234.
Lubrication. 239.
Stuffing-boxes. 239.

Electric locomotive. 87, 131.
Development. 131, 146.
Number. 133.
Speed. 88, 91.
Flexible conduit. 248.
Safety. 233.
Wiring. 246.
Engineering Analysis Applied to Municipal Waterworks. WILLIAM SHAW. 47.
Fever. *See* Typhoid fever, *under* Pittsburgh.
Fillets. Testing. *See* Stresses.
FLANAGAN, G. E. Discussion of Pittsburgh waterworks. 343.
FLANAGAN, G. E. Discussion of Typhoid fever. 356.
FLANAGAN, W. N. Discussion of Blast-furnace. 167.
FLANAGAN, W. N. Discussion of Gas-producer. 36.
Four-high mill. *See* Rolling-mill.
FRANK, I. W. Discussion of Rolling-mill. 280.
FRANK, R. J. Discussion of Stresses. 224.
FRITCHMAN, F. M. Discussion of Coal-mining. 108.
Fuel. *See* Power-plant development.
FULLER, C. P. Discussion of Stresses. 226.
FULTON, J. S. *Some Notes on the Loss of Pressure and Temperature in Cold-Blast Lines.* 159.
Furnace. *See* Normalizing furnace.
Gas. *See* Coke-oven gas, *under* Normalizing furnace. Gas-producer.
Gas-producer.
Coal. 15, 44.
Efficiency. 27, 28, 38, 43.
Glass manufacture. 12.
Heat balance. 28, 40.
Operation. 11.
Gaseous mines. *See* Electricity in mines.
Gears. Testing. *See* Stresses.
Gimbel store. *See* Store building.
Glass manufacture. *See* Gas-producer.
GOODALE, S. L. Discussion of Steel. 267.
GRAMM, G. E. Discussion of Coal-mining. 153.
HAAG, L. W. Discussion of Normalizing furnace. 322.
HAGGART, C. N. Discussion of Store building. 192.
HAWLEY, W. C. Discussion of Pittsburgh waterworks. 344, 346.
Heat balance. *See* Gas-producer.
HERTY, C. H., JR. *Some Notes on the Coalescence of Non-Metallic Inclusions in Steel.* 259.
The High-Pressure Power-Station. EDWARD W. NORRIS. 250.
History. *See* Rolling-mill. Waterworks, *under* Pittsburgh.
HOCKENSMITH, W. D. Discussion of Coal-mining. 152.

Hot-blast lines. *See* Blast-furnace.
HUTCHINSON, G. H. Discussion of Store building. 192, 193.
Illumination. *See* Lighting, *under* Store building.
ILSLEY, L. C. *Investigation of Electrical Equipment for Gassy Mines.* 233.
Impurities in steel. *See* Steel.
Inclusions in steel. *See* Steel.
Industrial development. United States. 1.
Insulators. Testing. *See* Stresses.
Investigation of Electrical Equipment for Gassy Mines. L. C. ILSLEY. 233
JACOBS, N. B. Discussion of Pittsburgh waterworks. 79.
JOHNSON, C. M. Discussion of Steel. 265, 266.
JOHNSON, E. R. Discussion of Stresses. 224, 228.
JOHNSON, EDWIN H. Discussion of Coal-mining. 109.
JORGENSON, F. F. Discussion of Coal-mining. 151.
JUMP, E. P. Discussion of Blast-furnace. 170.
KATHNER, A. T. Discussion of Normalizing furnace. 322, 323, 324, 325, 326, 327, 328.
KATHNER, A. T. Discussion of Rolling-mill. 281.
Kaufmann and Baer building. *See* Store building.
KENNEDY, JULIAN, JR. Discussion of Normalizing furnace. 324.
KINGSLAND, R. L. Discussion of Coal-mining. 150.
KISER, A. B. Discussion of Coal-mining. 147.
LABOON, J. F. Discussion of Pittsburgh waterworks. 80, 83, 86.
LADD, GEORGE T. *Recent Development in Steam Generation.* 1.
LANPHER. E. E. *A Century of the Pittsburgh Waterworks.* 331.
LEAF, J. P. Discussion of Pittsburgh waterworks. 340, 341.
LESHER, C. E. Discussion of Coal-mining. 156, 157.
Light, Polarized. *See* Stresses.
Lighting. *See* Store building.
LONGENECKER, CHARLES. Discussion of Normalizing furnace. 323.
Lubrication. *See* Electricity in mines. Rolling-mill.
LUTZ, T. J. Discussion of Normalizing furnace. 328.
MCCRACKIN, B. H. Discussion of Coal-mining. 153.
MCCULLOUGH, F. M. Discussion of Store building. 193.
MACFARREN, W. W. Discussion of Bearings. 303.
MACFARREN, W. W. Discussion of Rolling-mill. 280.
MCMILLAN, L. B. Discussion of Normalizing furnace. 329.
MAVOR, J. V. Discussion of Coal-mining. 112.
Mechanical Loading of Coal in the Pittsburgh District. L. E. YOUNG. 97.
MILLS, C. P. *Construction and Operation of Kathner Normalizing Furnaces.* 305.
Mine accident. *See* Safety, *under* Electricity in mines.
Mine Locomotives for Gathering and Main-Line Haulage. G. H. SHAPTER. 131.
Mine Locomotives for Gathering and Main-Line Haulage. W. A. CLARK. 87.
NATHANSON, J. B. Discussion of Stresses. 224.

NICHOLLS, P. Discussion of Gas-producer. 42, 43.
Nicol prisms. *See* Stresses.
Non-metallic inclusions. *See* Steel.
Normalizing furnace. 305.
    Coke-oven gas. 318.
    "Duraloy." 310, 312.
    Oil burners. 308, 320.
    Temperature control. 314, 315.
NORRIS, EDWARD W. *The High-Pressure Power-Station.* 250.
Observations on Gas-Producer Operation. VICTOR WINDETT. 11.
Oil fuel. *See* Oil burner, *under* Normalizing furnace.
Open-hearth furnace. Comparison with glass furnace. 13.
OSLER, G. F. Discussion of Coal-mining. 100.
PAUL, J. W. Discussion of Coal-mining. 110.
Photo-elastic testing. *See* Stresses.
Pittsburgh.
    Allegheny County Steam Heating Company. 176, 177.
    Coal. *See* Coal-mining.
    Kaufmann and Baer building. *See* Store building.
    Typhoid fever. 347.
    Waterworks.
        History. 331.
        Rehabilitation vs. new construction. 47.
        Steam vs. electrical operation. 47, 64, 82, 83.
Polarized light. *See* Stresses.
Power-plant.
    Development. 1.
        Boiler operation. 6.
        Feed-water. 6.
        Fuel. 9.
        High-pressure steam. 4.
        See also Steam-boiler. Steam-turbine.
        Pulverized coal. 6.
    See also Mechanical plant, *under* Store building.
Preheated air. *See* Air preheater.
Pulverized coal. *See* Power-plant.
Pumping station. *See* Waterworks, *under* Pittsburgh.
Pumps. Steam vs. electrical operation. *See* Waterworks, *under* Pittsburgh.
Pyrometer. *See* Temperature control, *under* Normalizing furnace.
Rails. Testing. 217.
Recent Development in Steam Generation. GEORGE T. LADD. 1.
REED, L. J. Discussion of Gas-producer. 45.
Research. 11.
RICE, O. D. Discussion of Normalizing furnace. 323, 325.
RIDDLE, L. E. Discussion of Blast-furnace. 168, 169, 170, 171.

Roller-bearings. *See* Rolling-mill.
Rolling-mill.
Brinell test for pressures. 292.
Four-high mill. 268, 291.
History. 268.
Roll grinding. 275, 276.
Gear reduction. 296.
Lubrication. 294, 298, 300.
Roller-bearings. 270, 283.
Timken. 283.
Three-high mill. 287.
Two-high mill. 288.
SAEGER, G. A. Discussion of Store building. 194, 195.
Safety. *See* Electricity in mines.
SERGESON, R. Discussion of Stresses. 227, 228.
SHAPTER, G. H. *Mine Locomotives for Gathering and Main-Line Haulage.* 131.
SHAW, WILLIAM. *Engineering Analysis Applied to Municipal Waterworks.* 47.
SHOVER, B. R. Discussion of Bearings. 298, 300.
SHOVER, B. R. Discussion of Rolling-mill. 278.
SHOVER, B. R. Discussion of Steel. 264.
SKINKLE, W. B. Discussion of Bearings. 301.
Slags. *See* Non-metallic inclusions, *under* Steel.
SMITH, M. L. Discussion of Store building. 192.
Some Notes on the Coalescence of Non-Metallic Inclusions in Steel. C. H. HERTY, JR. 268.
Some Notes on the Loss of Pressure and Temperature in Cold-Blast Lines. J. S. FULTON. 159.
Sonims. *See* Steel.
SOUTHWARD, GLENN B. Discussion of Coal-mining. 113.
SPRECHER, CLAY. Discussion of Gas-producer. 39, 40, 41.
Statistics of Typhoid Fever in Pittsburgh. C. F. DRAKE. 347.
Steam, High-pressure. *See* Power-plant. Steam-boiler. Steam-turbine.
Steam-boiler.
High-pressure. 250, 255, 256, 257.
Steam-turbine.
High-pressure. 250, 257.
Steel.
Non-metallic inclusions. 259.
Coalescence. 262, 267.
STOLTZ, G. E. Discussion of Bearings. 304.
STOLTZ, G. E. Discussion of Rolling-mill. 279, 281.
Store building.
Kaufmann and Baer. 173.
Concrete. 185, 192, 193, 194.
Lighting. 195.

Reconstruction. 180.
Underpinning. 189.
Mechanical plant. 175, 176.
Stresses.
Testing by polarized light. 199.
Elasticity. 200.
Fillets. 213, 214.
Gear teeth. 215.
History. 223.
Insulators. 220.
Nicol prisms. Use. 204, 208, 210.
Rails. 217.
Study of Stresses by Means of Polarized Light and Transparencies. R. V. BAUD. 199.
TAYLERSON, E. S. Discussion of Steel. 266.
Testing. *See* Stresses.
Three-high mill. *See* Rolling-mill.
Timken bearings. *See* Rolling-mill.
Transportation of Coal by Belt Conveyors. E. C. AULD. 117.
Two-high mill. *See* Rolling-mill.
Typhoid fever. *See* Pittsburgh.
Underpinning. *See* Store building.
VAYDA, L. Discussion of Normalizing furnace. 326.
VIEROW, EMIL A. Discussion of Gas-producer. 41.
WALDORF, F. *Development and Application of Timken Roller-Bearings for Steel-Mill Equipment.* 283.
WALKER, GILBERT S. Discussion of Pittsburgh waterworks. 83.
Water. *See* Feed-water, *under* Power-plant development.
Water-supply. Pittsburgh. *See* Waterworks, *under* Pittsburgh.
Waterworks.
Economy, Pa. 340, 341.
Leetsdale, Pa. 341.
Pittsburgh. *See* Pittsburgh.
WECKSTEIN, S. M. Discussion of Bearings. 299, 301.
WICKERHAM, P. S. Discussion of Pittsburgh waterworks. 84.
WINDETT, VICTOR. *Observations on Gas-Producer Operation.* 11.
YOUNG, L. E. *Mechanical Loading of Coal in the Pittsburgh District.* 97.

RECENT DEVELOPMENT IN STEAM GENERATION*

By George T. Ladd†

INTRODUCTION

During the past quarter of a century we have seen immense strides in all forms of industry.

The steel industry, the industry closest to our hearts in Pittsburgh, has increased from an output of 10,188,329 tons in 1900 to 45,393,524 tons in 1925.

The output of the cement industry has increased from 14,311,407 barrels in 1899 to 164,057,000 barrels in 1926.

The automobile industry has grown from nothing to an annual output of 4,000,000 cars during the life of all of us here.

The paper output has increased from 2,167,593 tons annually in 1899 to over 10,000,000 tons a year.

The chemical industry, with the manufacture of fertilizers, carborundum, aluminum, carbids, etc., is another new industry which has outgrown the clothes of a child and become a man within the memory of all of us here to-night.

The mining industry has grown from small isolated mines to a business requiring huge organizations with their own transportation systems and world-wide affiliations. The mining of coal in our immediate territory has decreased, but this is only a temporary condition, as the demand for coal has not kept pace with the growth of other things on account of the increased economies in the use of coal, of which I shall speak later; but the possible thermal economies to be made in the near future are small compared with those which have been made in the past few years, and the growth in demand for coal will once more keep pace with the growth in industry. This will again make it profitable to operate our coal-mines.

Air transportation is an entirely new development and new plants are springing up for the manufacture of apparatus for this new field and its correlated industries.

Transportation by land and sea has grown by leaps and bounds to keep pace with ever growing demands.

*Presented January 17, 1928. Received for publication January 24, 1928.
†President, Ladd Water Tube Boiler Co., Pittsburgh.

The manufacture of rubber goods, textiles, drugs, glass, and innumerable other major and minor products and their accessories has shown corresponding growth.

We have seen centralized heating, in our large cities, grow from small isolated plants in the basements of buildings to large plants similar to that of the Cecil plant of the Allegheny County Steam Heating Company in our own city.

The incessant cry from every one of these industries has been power—more and more power.

The first response to this demand was the development of the steam-turbine, and we in Pittsburgh have been closely identified with this growth through the Westinghouse companies and George Westinghouse, a former member of this Society. One of our past presidents, W. B. Spellmire, told you last year how the size of single steam-turbines had grown from 5000 kilowatts in 1902 to 65,000 kilowatts in 1926, and to 208,000-kilowatt compound units in course of construction; how the pressure at which they operated had increased in the same period from 200 to 1200 pounds; how the heat rate had decreased from 22,000 B.t.u. per kilowatt-hour in 1902 to 9600 B.t.u. per kilowatt-hour in 1926.

Single power-houses generating 30,000 kilowatts in 1920 were mammoth affairs, and to-day single plants of 200,000 kilowatts are in operation, and plants of 1,000,000 kilowatts in process of construction.

Twenty years ago the development of the stoker, combined with the better economies of the turbine, enabled the old boiler plants to carry the increased station output, but as pressures rose and units grew larger the old boiler-houses could not meet the demand and the boiler-maker began to study metallurgy and to turn his boiler-shop into a machine-shop to keep pace with modern industry. In 1920, the author read before this Society a paper describing boilers of 2650 horse-power each which were then installed for a large industry in Detroit, and told you how these were the largest boilers ever built and were then operating at 11,000 horse-power each, and producing 330,000 pounds of steam an hour. Indicating the marvelous improvements which have occurred in the past few years, two of these boilers have been equipped with water-wall furnaces, increasing the total heating surface per boiler to 30,000 square feet, and each of these revamped boilers is now delivering continuously over 500,000 pounds

of steam an hour, and the latest one has produced over 600,000 pounds an hour. Air-heaters were installed and the overall efficiency of these units producing the larger output is about one per cent. greater than that of the original units.

In New York City, one year ago, three boilers were installed, designed to deliver 325,000 pounds of steam each. They are actually producing 350,000 pounds of steam each, and this output is limited only by the size of the fans. The fourth unit has just gone into operation and is producing 400,000 pounds of steam in the same space as one of the original units. Studies now being made on the fifth boiler indicate that a unit can be designed that will produce 750,000 pounds of steam in a similar space, and it is not improbable that before ten units are installed in this plant one will be designed to produce 1,000,000 pounds of steam in a similar space.

It is interesting to note that the limiting feature is not securing proper materials, burning of the required amount of fuel, absorbing the heat in the boiler, providing for proper circulation or such things, important as these features are, but in providing for smokeless combustion. We used to think that smoky chimneys were a sign of prosperity, but to-day the stacks of our large modern power-stations are practically smokeless.

As explained before, pressures have increased from 250 to 1400 pounds, and in some foreign plants a pressure of 3200 pounds is being experimented with. One of the properties of water is that as the pressure increases, steam bubbles, released in boiling, decrease in size, and, at 3200 pounds pressure, boiling, as we know it, is non-existent; the water passes into steam with no ebullition.

STEAM PRESSURES

There are three steps in pressures for power-houses in general use in this country: (1) 160 to 450 pounds; (2) 550 to 800 pounds; (3) 1400 pounds.

Pressures of 160 to 450 Pounds. There are many plants still in service at 160 pounds, but these are small and relatively unimportant. There are a great many plants in operation at 250 pounds, and these are fairly new. The upper limit of this type of plant is 450 pounds, because above this pressure the steam, in passing through a turbine,

loses its superheat, with an initial temperature of 725 degrees, which is the limit to-day with materials now in general use. The steam condenses, and the condensed steam cuts the blades in the lower pressure section of the turbine. It then becomes necessary to pass the steam through a reheater to give it a certain amount of superheat, and if we do this it is more economical to go to 550 to 800 pounds.

Pressures of 550 to 800 Pounds. These pressures are limited by the fact that the high-pressure turbine and the low-pressure turbine can be on a single shaft with the generator. The steam passes into the high-pressure turbine at 550 to 800 pounds and 720 degrees F. total temperature and, depending upon the design of the turbine, is discharged at 400 to 250 pounds, containing 15 to 30 degrees F. superheat, is reheated to 720 degrees F. by being conducted back to a superheater in the same boiler setting as the primary superheater, or through a separate boiler especially designed for the purpose, or heated to approximately the temperature of the high-pressure steam through a live-steam reheater located at the turbine; or some combination of the above systems may be used. When the pressure is above 800 to 900 pounds it is more economical to build the high-pressure section and low-pressure section in two separate units, each with its own generator.

Pressures of 1400 Pounds. At 1400 pounds the high-pressure section is usually designed to operate at 3600 r.p.m. and the low-pressure section at 1800 r.p.m. The high-pressure section, which is from one-fourth to one-third the capacity of the low-pressure section, is the most efficient part of the unit, and for some recent plants under consideration is slightly less in cost per kilowatt. The method of operation is as described for the preceding pressure, the steam passing through the high-pressure turbine, thence to a reheater and back to the low-pressure turbine. The turbine takes up very little space and is usually set near the boiler to simplify piping. This pressure was chosen because it was felt that it was not too high for metals of known properties; valves and fittings could be constructed without too great a departure from adopted practices; and the pressure was low enough so that the difference in density between water and steam was still great enough to produce good boiler circulation. There are

now three of these installations in operation and the troubles have been less than expected. Two more installations will be made this year.

The drums are made of forged steel. The rough drum is hammered out of an ingot, machined inside and out, and the heads necked in so that heads are integral with the drum. The finished drums have an inside diameter of 40 inches and a length of 20 to 40 feet, depending upon the output of the boiler, and the shell is from three to five inches thick, depending upon the pressure and arrangement of tubes. Tubes are rolled in the ordinary manner, with two or more grooves 1/16 inch deep placed in the tube seat, so that when the tube is rolled the metal in the tube will be forced into the groove, giving additional holding power. The large nozzles above four inches are fastened to the shell by stud bolts, the smaller ones rolled in, and the other end of the tube rolled into a flange grooved in a manner similar to the tube seat in the drum. Drums constructed in this manner have now been in operation for from one to two years and thus far have given no trouble.

The tubes are, respectively, 4, 3¼, 3 and 2 inches in outside diameter. The smaller tubes have the advantage of dividing the water up into smaller sections, and, being thinner, they give a better heat transfer. On the other hand, the larger tube gives more water storage, and as the circulation is poorer at the higher pressure, due to the fact that the water and steam are more nearly at the same density, the tubes may last longer and the liability of rupture may not be as great. Research is now being conducted along these lines.

The Boiler Code Committee of the American Society of Mechanical Engineers and the insurance companies have been co-operating with the manufacturers and users to give as large factors of safety as at lower pressures; in some cases, the factors of safety are greater. The process of forging a drum requires excess metal, not all of which is removed in machining, thus giving excess strength. Metals with a higher carbon content, and consequently greater tensile strength, have been used for some of these drums, and it is probable that alloy steels will be used in the near future. A committee composed of representatives of manufacturers, engineers, and users of flanges and flanged fittings has been working on standards for steam pressures up to 3200 pounds, and has already adopted and published a report giving a tentative standard up to 1350 pounds. Several forms of satisfactory

joints have been worked out and, in practice, less trouble is being experienced than at lower pressures. This is undoubtedly due to the very careful attention that is being paid to the manufacture and installation of the high-pressure equipment.

REQUISITES FOR OPERATION OF BOILERS AT HIGH RATINGS

Other recent improvements which have been concurrent with and necessary for the increased output of boilers are: (1) Water conditioning; (2) Pulverized coal; (3) Water walls and screens for furnaces; (4) Air preheaters.

Water Conditioning. If boiler water contains only 12 grains of foreign matter per gallon (this is considered very good boiler water) and the boiler is evaporating 500,000 pounds of steam an hour, the boiler will receive over 100 pounds of foreign matter an hour if none passes over with the steam. This would be over a ton every 24 hours, so that the necessity for proper water treatment is readily apparent. It is usually necessary to distill the boiler feed-water and, as the make-up in a modern station usually does not exceed three per cent., this does not present a serious problem. Pure water, however, is a wonderful absorber of oxygen. When the oxygen is carried into the boiler it usually attacks the metal of the drums or tubes, and seems to do so more readily at higher temperatures. It is necessary, therefore, to remove the free oxygen from the feed-water before introducing this feed-water into the boiler.

Pulverized Coal. At the same meeting at which the author presented his previous paper on boilers, another paper was presented describing the application of pulverized coal to these boilers. This was one of the first large installations, if not the first, to use pulverized coal for firing boilers. Since that time many other installations have been made, with many more in process of construction, and it is safe to say that at the present day no boiler installation goes in without pulverized coal being considered. Stokers have been perfected and are still being installed on many jobs, but in developing a design to secure the maximum output of a large boiler in a small space there is nothing to take the place of pulverized coal, and it would have been very diffi-

cult, if not impossible, to secure the large steam outputs previously described without the improvements that have been made in this method of burning coal.

Water Walls and Screens. The early large boiler installations had refractory furnaces. These had been used for years in spite of their known limitations, and it was found that some other form of furnace construction was necessary. Air-cooled refractory walls constituted the next step. An air space, nine to twelve inches wide, was left between the fire-brick lining of the furnace and the outside wall. Air was circulated through this wall, heated, and admitted to the furnace. This was an improvement, but it was soon found that better results could be obtained by lining the walls with water-tubes and putting water-tubes at the bottom of the furnace to keep the ash below the slagging temperature. These tubes are sometimes connected into the boiler circulation and sometimes have a circulation independent of the boiler. Such installations have now been in service long enough to demonstrate their usefulness for this work. The maintenance is less than with refractory walls and they add to the heat-absorbing ability of the boiler. Last year there were built and put into operation several steam generators in which the furnace was entirely lined with water walls to take the maximum advantage of this construction. The results obtained indicate that there will be many more of these installations.

Air Preheaters. Economizers have been used for a great many years to recover heat in the waste gases discharged to the stack and make for more efficient steam generation. The largest loss in the steam cycle has been, and still is, the heat absorbed by the condenser circulating water. In recent years this has been decreased by stage bleeding—the condensed water is returned to the boiler through a series of reheaters, and the water in these reheaters is raised in temperature by steam bled from successive stages of the turbine, so that the feed-water is nearly at the temperature of the boiler water. This makes an economizer uneconomical and the air preheater has been designed to recover as much as possible of this heat from waste gases. The gases from the boiler pass through parallel passages in the air preheater, breaking up the streams into small lanes; the incoming air

passes through other parallel lanes or across them in a direction counter current to the hot gases, so that the temperature of the air may be raised as much as possible. The low limit is the dew-point of the escaping gases, which means that at the usual operating point of the boiler unit the temperature of the escaping gases will be 300 to 350 degrees F. The air is preheated to a temperature of 450 to 600 degrees F. and is used for taking the moisture out of the coal before grinding, in the case of pulverized coal, and is introduced into the furnace to assist combustion with both stokers and pulverized coal. This has made possible overall efficiencies of 88 to 89 per cent. with steam generator units operating at high ratings. When this is compared with the 70 per cent. efficiency customary up to five or six years ago, it is easy to see what has happened to our coal-mines.

It is interesting to see an engineer working up plans for a new power-station design. For pressure he assumes the highest of each group heretofore described and works up propositions on each of the groups, taking into consideration water-supply, cost of fuel, labor, money, load-factor, etc., at the immediate time, as well as the probable trend over a number of years to come. After this is done he makes an intensive study of each group to see if each piece of apparatus is going to pay for itself—perhaps the last 1 to 1½ per cent. of efficiency will not earn enough to pay for its keep; perhaps some one piece of apparatus can be set on a different floor or in some other part of the station, thereby saving a man on each shift; perhaps the plant is to be located where land is cheap and natural foundations available and a low, spread-out plant is the most economical; perhaps the plant is to be located in the city or where expensive piling must be used and a tall plant occupying little ground area is the most economical.

All these questions are given careful consideration by the engineer to-day, and studies of future power-houses are begun two or three years before they are needed, in order to give proper weight to the various features. It is interesting to note that most of the hydro-electric systems have built, or are building, steam plants to supplement their water-powers, and at the present time many of these corporations are installing steam plants that will produce electric current at a cost lower than that for which it can be obtained from extensions to their hydro-electric plants.

With such things being done to-day, it would be a bold man who would make any predictions as to probable developments even within the next few years.

The high-pressure units make possible the bringing up to date of the present 250- to 400-pound plants by giving increased capacity, and increase in overall efficiency. As the exhaust-steam turbine bridged the transition from engines to turbines, so the superimposing of high-pressure units will bridge the transition from low-pressure power-houses to high-pressure ones. When we consider the industrial plants using steam for process work, the high-pressure turbine offers still greater possibilities. By raising the steam pressure to 800 or 1400 pounds and using the turbine as a reducing-valve, electricity can be put at the switchboard for one-third of a pound of coal per kilowatt, and the steam is then available for its usual work.

COKE AS FUEL

Low-Temperature Distillation of Coal. This process offers interesting possibilities. The fact that coal heated to about 1000 degrees F. gives up most of its volatile gases (from which benzol, gas, tar, and hundreds of other by-products may be obtained) and leaves a coke, has been known for many years, and millions of dollars have been spent in experimental plants to recover these by-products before using the coal for fuel. The coke produced is not a metallurgical coke, and the uses to which it could be put have had a limited application.

A system in which the coal is pulverized before being heated, and the resultant coke is ready to fire under boilers in a pulverized form, has been in operation for over a year in Milwaukee and has proceeded far enough to warrant the statement that it will be successful.

Another system in which the resultant coke offers a successful domestic fuel has been in commercial operation at Essen, Germany, since 1924, and a similar plant is now being erected at New Brunswick, N. J. For steel-plant work it is suggested that such a system would replace the present producer plants. The resultant coke would be used to make water-gas, and the gases obtained from these processes would be used to mix with blast-furnace gas and coke-oven gas to produce a gas that would give maximum results in the plant. This business is in its infancy, but has proceeded far enough to indicate its rapid growth from now on.

Dry Quenching of Coke. The usual way of quenching metallurgical coke has been by water. By this method (1) the sensible heat in the coke is lost; (2) the water splits the coke, thus lessening the amount of large-sized material; (3) the coke contains a large percentage of moisture.

In Europe there are 12 installations, and in the United States there is one installation in which the coke is introduced into a furnace and a fan circulates an inert gas through the coke and over a waste-heat boiler. The coke is reduced to about 350 degrees F., and from 650 to 900 pounds of saturated steam are produced per ton of dry-quenched coke. The coke is much superior to the water-quenched coke and its heat is put to a useful purpose. The operation is automatic, thus releasing men for other work.

Such arrangements can be applied to other purposes, such as recovering the heat from cement clinkers. In fact, the recovery of waste heat from oil stills, zinc, copper, steel, and glass furnaces and all industrial operations is receiving increasing attention and the installations that have been made are saving thousands of tons of coal annually.

The rapid increase in research, supplemented by the activities of manufacturers who are putting these discoveries into practice, makes the future most interesting to contemplate, and we can consider ourselves fortunate that we are able, not only to contemplate, but to take part in this development.

OBSERVATIONS ON GAS-PRODUCER OPERATION*

By Victor Windett†

Engineering investigations of technical questions may be made in at least two ways.

They may be based on laboratory experimentation and a study of the data secured for the basis of further action. A valuable feature of such procedure is a high degree of precision attending the conduct of the work and accompanying measurements. The maximum probable error of the results arrived at may be reduced to a known and negligible quantity. The conclusions may be stated with a certainty, within the range of the work, and by extrapolation for a considerable extent beyond. A sometimes undesirable feature of laboratory research is its quite general limitation to small quantities of material and a small scale of operations, and the manipulation appropriate to laboratory apparatus.

Another method used in research is the observation and measurement of the steps of a manufacturing process as carried out in a factory on full scale. This gives an opportunity of gaging the work of a going concern, involving a considerable period of time, the working of a force of men, and the use of large amounts of material, with all of the incidental happenings attendant on such affairs. By proper study, the variables may be evaluated and eliminated as desired, in the same way that a chemist precipitates certain substances from a solution which he wishes to study. According to the mathematical theory of probabilities the plus and minus variations from a carefully determined average will balance each other in a sufficiently large number of cases. A curve plotted from the results will give correct values, errors in which may be stated with virtually the precision and certainty of laboratory work.

An instance of harmonizing a large number of records of the ordinary working of a factory is given in this paper. The curve plotted in Fig. 1 is an average curve plotted from 430 determinations of the heat of combustion of producer gas, made from upwards of 60,000 tons of coal, in a space of 14 months. For plotting the curve, the abcissæ are assembled in steps of average temperature variations

*Presented October 25, 1927. Received for publication February 15, 1928.

†Manager of Gas-Producer Division, Wellman-Seaver-Morgan Company, Cleveland.

of five degrees F. The weighted value of the deviations of these observations from the curve is 0.24 per cent., or one part in 417. Considering the magnitude of the work, and the fact that the results were obtained in the ordinary routine of the running of the factory, the approach to laboratory precision may surprise one unfamiliar with the certainty and regularity of the functioning of a high-grade, completely mechanical, and constantly operated gas-producer, in which the input of coal and the ash discharge proceed with but minor changes.

The factory to which reference is made is Factory No. 2 of the American Window Glass Company, at Jeannette, Pa. Two glass furnaces, or "tanks" as they are called, hold each 1800 tons of molten glass. The blown glass is flattened and annealed in 26 ovens. The

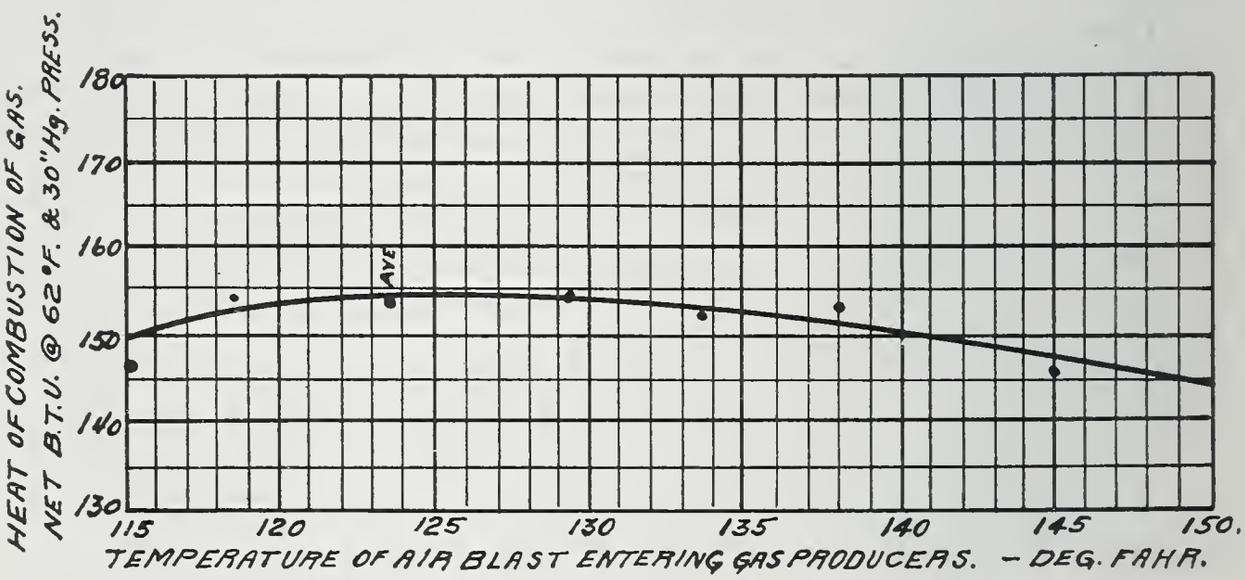

Fig. 1. Heat of Combustion of Producer Gas Referred to Temperature of Humidified Air-Blast.

gas for heating these furnaces is supplied from a gas house containing 10 producers.

Furnace conditions in the glass industry, regarding the heat supply, permit but the smallest possible variation from standards required for satisfactory glass making. That such conditions are not too exacting is shown in a moderately small factory making fruit jars. A random inspection of the sheet from the recording pyrometer showed a maximium variation of less than 10 degrees in 30 hours at the "working" end of the furnace. Such close working insures regularity in quality of the factory product.

The thermochemical reactions of the components of the raw materials charged are practically constant in the furnace. As the

charging and drawing of the furnace proceed at a uniform rate throughout the life of the furnace (except for the Sunday intermission, during which the full heat is kept up) the gas supply must not suffer appreciable variation for the length of life of the furnace which determines the length of the run. In some plants, glass-tank operation extends in this manner for as long as 15 months.

The severely close limits of variation permissible in glass-furnace practice have made the leaders in this industry particularly keen to take advantage of improvements in gas-producer equipment. Mass production with the smaller plant output of the average glass factory does not cover up low efficiencies of obsolete machinery, as is the case in some metallurgical works where the constant aim is tonnage.

A glass furnace is similar to an open-hearth steel furnace in a number of ways. They both have regenerators, use raw producer gas, and burn it over the "bath" which is contained in open hearths. There is a generation of heat from the thermochemical reactions of the constituents of the charge. In a steel reheating furnace a further approach to glass practice is made in the demand for a steady supply of heat. But in open-hearth furnace work there is so large a supply of additional heat from the oxidation of metalloids of the charge during the time of the "boil" that a considerable fluctuation of the heat supplied by the producer gas becomes a factor in the management of the producers, and changes their rate of gasification. In glass melting, this feature is absent, and there is nothing to modify the flow of gas. In fact, changes in the gas are highly undesirable, and must be held down to a minimum.

When melting cold stock in an open-hearth furnace (which parallels the charging of a glass furnace) the fuel consumption is about 40 per cent. of the weight of the furnace product. A glass furnace of the kind to which the preceding remarks are applicable will melt glass with a ratio of about 40 to 65 per cent. A study of the heat balances of these furnaces would show that a large part of the difference is due to the variation in the specific heats of the materials melted, and to the different amounts of heat employed in the melting of the stock; but, to the gas house man who must make the gas, a great dissimilarity exists. In a glass factory a vastly greater regularity of gas output must be maintained, both in quality and quantity, for many months at a time.

In the days long gone by, the perfect fuel was natural gas. It was high in calorific value and constant in quality. As for quantity, all the furnace man had to do was to open or shut his main supply valve. Natural gas has passed out of use to all practical intents, as its price has risen in inverse ratio to the available supply.

With these fine characteristics of natural gas in mind, one can appreciate the high compliment the president of a large glass factory paid to the operation of his mechanical producer plant, after two furnace runs, one of 15 months and a following one of 12 months. He said his furnaces ran as though he had an unlimited supply of natural gas. All there was to do, it seemed, was to open the gas-valve.

In 1923, the substitution of producer gas for natural gas had to be made at Jeannette, as had previously been done in many other plants. In undertaking this change the following specifications controlled the choice of equipment:

1. A good grade of low-sulphur bituminous coal should be selected.
2. A regular temperature of gas on leaving the producer must be maintained.
3. A uniform quality of gas must be maintained.
4. A gas low in hydrogen and high in carbon monoxid is desired as giving most satisfactory conditions in the furnaces.
5. An even and low gas pressure should be the normal condition at the producer offtake.
6. The moisture content of the gas must be as low as possible.

Committees of engineers, glass technologists, and plant executives, including producer foremen, of the American Window Glass Company, reported in favor of a completely mechanical gas-producer, naming as their choice the Wellman-Seaver-Morgan Type L, No. 10, producer. Ten of these machines were installed in a capacious producer house, of reinforced concrete, steel, and brick. The chief features of the house are its perfect lighting, ample space, scrupulous cleanliness, and the small but adequate white-tiled, gas-analysis laboratory in a room on the producer operating floor. The dust-catchers and flue system use the characteristic Wellman-Seaver-Morgan features of dust collecting and clean-out drop legs, to the effect that the

STATE LIBRARY

time between "burn outs" extends to eight weeks, instead of the customary Saturday burn out of many plants.

All the necessary pyrometers, steam, gas, and air-blast pressure-gages, and thermometers for measuring the temperature of the saturated air as it enters the producers are used by the gas makers, in connection with the frequent gas analyses made as soon as the gas is sampled, to secure the fulfillment of the conditions set for the delivery of a proper gas to the tanks.

The coal used is screened Pittsburgh vein, bituminous coal from the Manor mine, in Westmoreland County, Pennsylvania. The coal is sized from ¾ inch to 2½ inches, the finest going to the boilers. The composition is as follows:

	Proximate analysis per cent.		Ultimate analysis per cent.
Moisture	1.54	Carbon	76.31
Volatile	34.57	Hydrogen	4.97
Fixed carbon	55.63	Oxygen	7.89
Sulphur (in volatiles)	(1.06)	Nitrogen	1.51
Ash	8.26	Ash	8.26
		Sulphur	1.06
Total	100.00	Total	100.00

Calorific value per pound of dry coal is 14,155 B.t.u. at 62 degrees F.

The personnel and work of the producer department is as follows:

Equipment		
Tanks	1	2
Ovens	14	26
Producers	4	8
Personnel		
Gas-house foreman—10 hours a day	1	1
Gas makers—each 8-hour shift	1	2
Laborers—each 12-hour shift	1	2
Machinist—one 10-hour shift	1	1
Electrician, Mechanical men	Part time for daily inspection and maintenance	

233787

Gasification of coal

	Steam pressure pounds per sq. in.	Tons per producer day	Pounds per producer hour	Pounds per sq. ft. per hour
For one tank, three producers	23	27	2510	32.1
For two tanks, five producers	28	32	2990	38.0
For 26 ovens, two producers	30	35	3350	41.5

Of the ten producers, the two not accounted for above, and two unused bays of the building, are to provide for future extensions to the glass-melting department.

Since the gas makers have gone on eight-hour shifts (instead of 12 hours), an improvement has been noticed in their being more alert and observant in their work. The force thus enumerated operates the producers, takes care of the ashes and soot, blows the flues, tends to the burn outs of the flues, and gives some time to the boilers and "tanks."

The rates of gasification are moderate and well within the ordinary capacity of the machine. This is evidenced by prevailing rates in smaller plants not so liberally provided with producers. Thus there are plants where for continuous running, rates are found of 42, 45, 46 and 49.9 tons per producer per day. In a zinc plant, due to the daily furnace cycle, the gasification for 20 hours is at a rate of 57 tons a day, and the remaining four hours at a rate of 14.4 tons a day. This high rate corresponds to a rate of 60.5 pounds an hour per square foot of producer cross-section with Illinois run-of-mine coal. In a brick plant of 51 kilns a continuous daily rate of 57.9 pounds is obtained, using Indiana nut coal.

The labor charge, when running eight producers, will approximate 26 cents per ton of coal.

On the starting up of the Jeannette plant it was thought desirable to vary the producer operation, as to some of its characteristics, to determine the most favorable working conditions from the point of view of operation of the glass tanks.

Inasmuch as gas analyses are made constantly, as a matter of gas-house routine, a like opportunity was given to study in this paper the influence of these changes on the making of the gas. For this purpose, gas analyses, covering the work of 14 months of 1925-1926,

have been selected from the records of two years. To have used all of the two years' work would have merely added to the labor of preparing this paper, without adding to the accuracy of the conclusions, as the unused figures were repetitive.

The gas temperatures as issuing from the producer covered the range from 1200 to 1540 degrees F. The mixture of air and steam which is delivered to the gasification zone—called variously the "air-blast" or "humidified air"—was used at from 115 to 145 degrees. The analyses continuing from year to year, the effect of the seasonal changes could be noted in the time selected, as well as for a longer time.

Before reviewing the work of these producers, it may be well to consider briefly some points of producer operation.

Air may be charged into the gasification zone by a steam-jet blower, or by a turbo-blower. In the first case, the steam is the propelling agent, and can not be kept apart from the air. It is well known that, as ordinarily used in the blower, it is wet, even to the extent of carrying frequent and sometimes fairly large quantities of entrained water. Unless the steam-pipes are well-covered, and fitted with a steam-trap and a separator immediately at the blower, these masses of water are carried into the fire. Even though they may be vaporized in passing from the blast hood to the fire, they upset the proper régime of gasification, by chilling the fire in spots, and at unknown, though frequent, intervals. This is productive of low carbon monoxid, high carbon dioxid, and undesirable fluctuations of temperature of the fire and of the gas.

Another circumstance attending the use of a steam-jet blower is that with a blower as ordinarily made the control of the temperature of the blast is nearly impossible without altering the volume of air delivered to the producer and hence the amount of coal gasified. Nor is it possible to increase the air delivery without simultaneously increasing the humidity to an unknown amount. One of the most important uses of steam in the blast is to prevent the formation of objectionably large clinkers. When this is done there is not much more for the steam to do that can not be done in other ways. It has been urged that the oxygen supply is increased without carrying inert nitrogen into the gas, as is the case when oxygen is obtained from the air; but the oxygen of the steam is accompanied by a corresponding

amount of hydrogen. Hydrogen is not often a desirable thing in gas, as it burns in a furnace with a short, sharp, cutting flame. Furthermore, the gas is so light in weight that it causes combustion to take place in a furnace up near the roof—shortening the life of the furnace—and not down on the metal which is to be heated. When steam is thrown into a producer in unregulated and irregular quantities, as when a jet blower is used, the fire is cooled in spots to an extent that allows some of the steam to pass through the gasification zone unchanged. It then passes out into the gas-main as water vapor. In the high furnace temperature it is disassociated, by which process it absorbs heat. Considering a gas of the composition of the average given in this paper having a calorific value of 153.9 net B.t.u. the presence of one per cent. of water vapor would absorb 4.53 B.t.u. To make up this loss, the fuel expense would be increased 3.5 per cent. That this may be a serious matter is evidenced by reports of water vapor in the gas of a number of plants equipped with old hand-operated producers, and using inefficient steam-jet blowers. In certain plants the moisture ranged up to 14 per cent. of the gas volume.

The turbo-blower is a self-contained unit of a steam-turbine, direct connected to a blower. It is located on the operating floor of the house, with a steam-pressure gage and the indicating gage of a long-distance thermometer set above it. Close at hand are the valves controlling the speed of the fan and the amount of steam put in the blast. With coals with ash fusion temperature above 2200 degrees, the amount of steam is so little that only a part (or, at most, all) of the exhaust steam of the turbo-blower is sufficient to prevent the clinkering of the ash to an objectionable extent. When coals of a lower ash fusion are used, calling for more steam, the additional amount over the turbine exhaust is supplied by the opening of the live-steam valve. By a careful watching of the hardness of the fire, and of the saturation temperature, the amount of steam used may be controlled to within two degrees of the blast temperature, a change above two degrees resulting in too soft a fire, while a drop of the same amount is accompanied with a slight hardening or clinkering.

Returning now to a consideration of the subject of this paper, the work at Jeannette, Table I is a daily record taken from the gas-house records over a period of two months. These two months are a fair sample of the whole.

TABLE I. DAILY REPORTS OF PRODUCER-GAS ANALYSES

Flattening House, American Window Glass Company, Jeannette, Pa.

1926	Combustibles					Non-combustibles				Gas	Degrees F.	
April	CO	CH_4	C_2H_4	H_2	Total	CO_2	O_2	N_2	Total	B.t.u.	Air	Gas
1	24.9	2.4	0.8	14.9	43.0	4.0	0.2	52.8	57.0	155.8	120	1350
2	25.3	2.4	0.8	14.6	43.1	5.2	0.2	51.5	56.9	155.2	"	"
3	25.8	2.1	1.0	13.7	42.6	4.4	0.2	52.8	57.4	154.6	"	"
5	25.0	1.8	1.0	16.3	44.1	5.4	0.2	50.3	55.9	156.6	"	"
6	25.5	1.9	0.8	16.0	44.2	4.6	0.1	51.1	55.8	155.2	"	"
7	24.7	2.1	1.0	16.5	44.3	5.0	0.1	50.6	55.7	159.0	"	"
8	25.4	3.0	0.8	14.7	43.9	4.0	0.2	51.9	56.1	161.4	"	"
9	24.5	2.9	0.8	14.1	42.3	4.8	0.2	52.7	59.7	155.7	"	"
10	25.0	2.0	0.8	14.4	43.2	4.8	0.2	52.8	57.8	150.1	"	"
12	24.3	2.1	0.8	14.6	41.9	5.0	0.2	53.0	58.2	149.1	"	"
13	24.7	1.9	0.8	15.2	42.6	4.8	0.2	52.4	57.4	150.5	"	"
14	24.7	1.9	0.8	15.2	42.6	4.8	0.2	52.4	57.4	150.5	"	"
15	25.0	1.9	0.8	16.0	43.7	4.8	0.2	51.3	56.3	153.6	"	"
16	24.2	2.1	0.8	16.0	43.1	5.0	0.2	51.7	56.9	152.9	"	"
17	24.6	2.0	0.8	16.2	43.6	4.8	0.2	51.4	56.4	154.7	"	"
19	24.8	2.1	0.8	15.6	43.3	5.0	0.2	51.5	56.7	153.7	124	"
20	24.6	1.9	0.8	15.0	42.3	4.8	0.2	52.7	57.7	149.6	125	"
21	24.6	2.3	0.8	15.5	43.2	5.0	0.2	51.6	56.8	154.5	122	"
23	24.2	2.8	0.8	14.1	41.9	4.8	0.2	53.1	58.1	154.0	"	"
24	24.7	2.1	0.8	15.0	42.6	5.0	0.2	52.2	57.4	151.8	"	"
26	24.8	3.1	0.8	13.2	41.9	4.4	0.2	53.5	58.1	158.2	"	1360
27	24.2	2.6	0.8	15.0	42.6	5.0	0.2	52.2	57.4	154.7	123	"
28	24.1	2.6	0.8	13.0	40.5	4.8	0.2	54.5	59.5	148.8	"	1380
29	24.8	2.8	0.8	14.1	42.2	4.8	0.2	52.8	57.8	154.8	"	1360
Total	594.1	54.8	14.8	358.9	1027.6	115.0	4.6	1258.8	1372.4	3693.3	2906	32460
Average	24.75	2.28	0.83	14.96	42.82	4.8	0.19	52.19	57.18	153.9	121.0	1350.
May	Two Producers											
3	24.2	2.4	0.9	14.6	42.1	4.4	0.1	53.4	57.9	153.5	122	1360
4	25.2	2.9	0.8	12.9	41.8	4.0	0.1	54.1	58.2	154.9	120	"
6	24.8	3.0	0.8	13.2	41.8	4.6	0.2	53.4	58.2	155.3	"	"
7	24.2	2.5	0.8	14.6	42.1	4.8	0.2	52.9	57.9	152.6	"	"
8	25.0	2.0	0.8	14.4	42.2	4.8	0.2	52.8	57.8	150.2	"	"
10	24.8	2.4	0.9	13.3	41.4	4.0	0.1	54.5	58.6	150.7	"	"
11	25.8	3.0	0.8	15.4	45.0	4.0	0.2	50.8	55.0	164.5	"	"
15	25.3	3.1	0.8	14.2	43.4	4.6	0.2	51.8	56.6	160.5	"	"
17	25.2	2.6	0.8	15.1	43.7	4.6	0.2	51.5	56.3	158.2	"	"
18	26.1	2.1	0.8	15.5	44.5	5.0	0.2	50.3	55.5	157.5	"	"
19	24.7	2.6	0.8	15.5	43.6	5.0	0.2	51.2	56.4	157.6	130	"
20	24.4	2.8	0.8	16.9	44.9	5.0	0.2	49.9	55.1	162.3	"	"
21	25.0	1.9	0.8	16.0	43.7	4.6	0.1	51.6	56.3	153.7	"	"
25	21.3	2.8	1.0	17.4	42.5	6.0	0.2	51.3	57.5	156.7	"	"
27	24.4	2.3	0.8	16.9	44.4	5.0	0.2	50.4	55.6	157.7	"	"
28	22.6	2.1	1.0	15.4	41.1	5.8	0.2	52.9	58.9	145.8	"	"
Total	393.0	40.5	13.4	241.3	688.2	76.2	2.8	832.8	911.8	2491.7	1982	21760
Average	24.6	2.5	0.84	15.06	42.50	4.76	0.17	52.57	57.50	155.8	124	1350

The average oxygen figure in the reported analyses during the entire period is 0.0015, or one-seventh of one per cent. As this is less than two-thirds of the probable error of the 430 analyses shown by the curve in Fig. 1, the oxygen figures have been dropped in the interest of probable greater accuracy. In this connection, the opinion of the chief chemist of the American Window Glass Company is of interest. It is that "The small percentages of oxygen, reported in our producer-gas analyses, without a doubt come from leakage in sampling, and manipulations with the 'Orsat' type of gas apparatus." This opinion is also that of the gas-house foreman, in charge of the gas-house laboratory, and is confirmed by the expert opinion of a number of gas technologists. The oxygen figures are as follows:

Percentage found	Number of times
0.00	34
0.1	60
0.2	336

Table II gives the monthly mean of an average of 36 analyses a month over the period under consideration. The average composition of the gas is given below; also, for comparison, the average analysis of gas from Pittsburgh coal. This is taken from Prof. W. Trinks's recent book on "Industrial Furnaces," vol. 2, page 2.

	Average			
	Wellman-Seaver-Morgan Per cent.		Trinks Per cent.	
Carbon monoxid	25.00	42.63	20.50	36.00
Methane	2.27		3.00	
Ethylene	0.87		0.00	
Hydrogen	14.49		12.50	
Carbon dioxid	4.69	57.37	7.50	64.00
Nitrogen	52.68		56.50	
Total		100.00		100.00
Average net calorific value at 62 degrees F. and 32 inches	153.9 B.t.u.		138.7 B.t.u.	
Average temperature, air-blast at 123.4 degrees	Gas 1395.0 degrees F.		.....	

TABLE II. GASIFICATION OF BITUMINOUS COAL, PITTSBURGH VEIN

Summary by Months of Producer Operation

Month of 1926	Number of		Combustibles					Non-combustibles			Heat of combustion			Temperature	
	Producers	Analyses	CO	CH_4	C_2H_4	H_2	Total	CO_2	N_2	Total	Net at 62° F., 30″ Mercury			Air-blast	Gas
			Percent.	Percent.	Percent.	Percent.	Percent.	Percent.	Percent.	Percent.	Min.	Average	Max.	Degrees F.	
January	8	49	22.70	2.54	0.87	16.80	42.91	5.75	56.34	57.09	139.4	149.8	169.2	127.8	1358
February	7	48	24.30	2.07	0.87	15.00	42.24	4.92	52.84	57.76	141.5	150.8	164 7	122.3	1380
March	8	41	24.82	2.23	0.85	14.82	42.72	4.95	52.83	57.28	146.7	154.3	165 5	117.2	1385
April	8	54	25.70	2.25	0.87	14.75	43.57	5.24	51.19	56.43	144.8	154.8	162.9	119.0	1370
May	8	40	25.00	2.41	0.84	14.18	42.43	4.62	50.95	55.57	147.2	156.4	166.3	121.0	1358
June	5	42	24.80	2.39	0.81	14.90	42.90	5.27	51.83	57.10	144.2	154.0	164.5	124.7	1340
July	5	33	23.30	2.23	0.84	14.95	41.32	5.45	53.23	58.68	145.6	155.2	169.6	125.5	1360
August	5	35	25.30	2.44	0.84	13.95	42.53	5.70	51.77	57.47	146.4	152.6	161.5	127.0	1435
September	5	24	26.10	2.45	0.83	13.50	42.88	5.40	51.72	57.12	146.8	153.1	173.4	127.0	1465
October	4	20	26.42	2.36	0.83	12.23	41.84	5.30	52.26	58.16	147.6	152.1	160.4	127.0	1480
November	4	33	25.20	2.47	0.88	12.08	40.63	5.36	54.01	59.37	136.3	153.5	169.2	127.0	1475
December	4	9	26.93	2.11	0.91	14.04	43.99	5.50	50.51	56.01	148.7	153.6	156.7	128 0	1430
Average	6	36	25.00	2.27	0.87	14.49	42.63	4.69	52.68	57.37	147.2	153.9	165 5	123 4	1395

A study of the summarized results by months, and of the graphs derived from them (Fig. 2), does not indicate any great seasonal

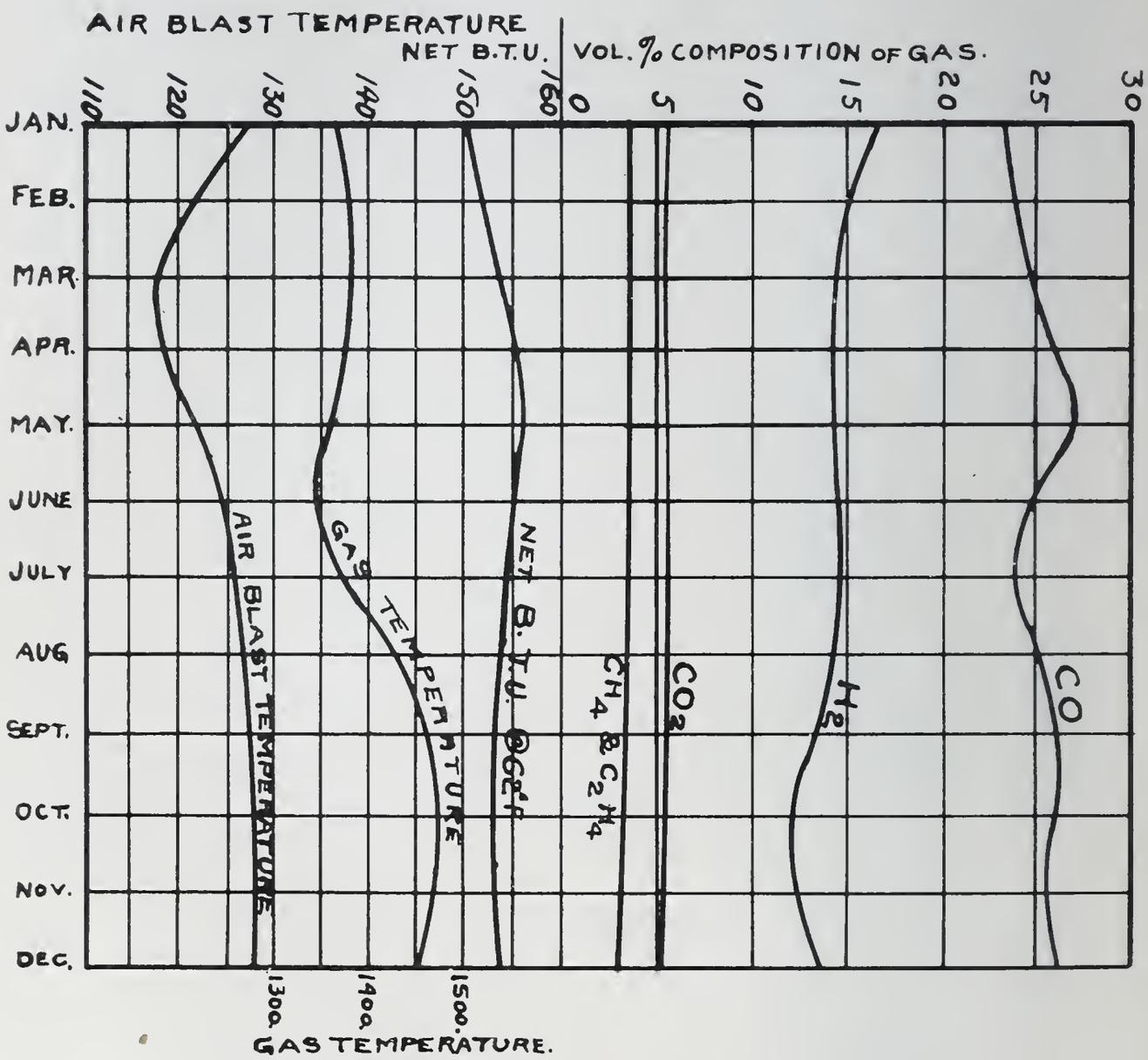

Fig. 2. Gasification Performance by Monthly Averages.

effect on the operation of the producers. From the discussion of the use of exhaust steam for humidifying the air, it would not appear that the climatic conditions from month to month would have much effect within the producer. An inspection of the heat balance of the operation would indicate that the principal item to be affected would be the loss by radiation. As this item is but four per cent. of the total heat, the difference between summer and winter is negligible.

In the event that the air was delivered to a producer by a motor or belt-driven fan, the steam used for humidifying the blast would in all probability be live steam rather than exhaust steam as is the case

Air-blast temperature	Number of analyses	Volumetric gas analyses								Net at 62 degrees F. 30 inches mercury B.t.u. per cubic foot			Gas temperature at outlet
		Combustibles					Non-combustibles						
Degrees F.		CO	CH_4	C_2H_4	H_2	Total	CO_2	N_2	Total	Minimum	Average	Maximum	Deg. F.
115	1	26.66	1.21	0.82	13.12	41.81	4.64	53.55	58.19	145.1	145.1	145.1	1360
116	60	25.11	2.21	0.90	14.14	42.36	4.87	53.00	57.64	146.7	153.1	169.3	1386
117	11	25.25	2.34	0.24	13.78	42.21	4.34	53.45	57.79	148.3	152.9	159.1	1364
118	23	25.00	2.09	0.81	14.40	42.30	4.68	53.02	57.78	150.0	151.1	160.5	1389
119	7	24.30	2.15	0.91	14.36	42.02	5.12	52.86	57.98	141.5	151.6	156.8	1437
120	90	25.18	2.34	0.82	14.60	42.94	4.77	52.29	57.06	143.7	159.6	169.5	1366
Average 118.3	191	25.10	2.26	0.86	14.36	42.53	4.76	52.66	57.42		153.6		1374
122	5	24.72	2.57	0.83	14.62	42.74	4.76	52.50	57.26	153.3	155.8	157.7	1354
123	3	24.55	2.70	0.81	14.17	42.23	4.93	52.84	57.77	150.3	155.5	156.2	1367
124	5	23.60	2.31	0.85	16.70	43.46	5.74	51.82	56.56	154.1	156.9	159.1	1388
125	83	26.45	2.35	0.85	12.50	42.15	4.82	53.03	57.85	136.3	153.5	174.0	1450
Average 124.7	96	26.25	2.37	0.84	12.84	42.30	4.76	52.94	57.70		153.8		1440
126	18	22.62	2.27	0.89	16.85	42.63	5.76	51.61	57.37	148.8	152.8	157.5	1344
127	1	27.35	1.92	0.81	11.32	41.40	4.65	53.95	58.60	148.6	148.6	156.3	1490
128	4	24.28	2.44	0.93	14.15	41.80	5.68	52.52	58.20	153.8	153.0	159.0	1400
130	81	24.95	2.22	0.86	15.10	43.13	5.88	50.99	56.87	145.4	154.8	164.8	1450
Average 129.2	109	24.58	2.23	0.87	15.28	42.96	5.83	51.21	57.04		154.3		1440
131	2	22.90	1.87	1.01	16.82	42.60	5.96	51.44	57.40	151.3	151.9	152.5	1350
132	3	25.23	1.99	0.88	14.58	42.68	5.72	51.60	57.32	146.4	154.1	156.7	1410
133	1	26.15	2.42	1.01	11.91	41.49	4.85	53.66	58.51	143.8	143.8	143.8	1480
134	26	21.90	2.36	0.84	17.08	42.18	6.36	51.46	57.82	139.3	151.3	152.7	1350
135	2	23.80	2.32	0.71	17.92	44.85	6.66	48.49	55.15	152.6	153.6	154.4	1349
Average 133.7	34	22.50	2.31	0.85	16.73	42.39	6.26	51.35	57.61		152.0		1360
138	2	24.43	1.87	0.71	17.03	44.04	6.56	49.40	55.96	148.6	152.9	152.9	1340
145	2	20.40	1.97	0.81	18.08	41.26	7.94	50.80	58.74		145.3		1400
Average 123.4	430	25.00	2.27	0.87	14.49	42.63	4.69	52.68	57.37	147.2	153.9	165.5	1395

when a steam turbo-blower is used. Then with a motor-driven blower, for instance, the amount of live steam used will be varied as between winter and summer operation due to the variations in atmospheric temperature and absolute humidity.

Aside from the rate of feeding coal, the two things which chiefly affect the quantity and quality of the gas are the temperatures of the air-blast and of the gas.

Table III gives the analyses grouped with reference to the variations of the temperature of the air-blast, starting with the minimum of 115 degrees. An examination of this table and the diagram in Fig. 1 shows that the gas of highest calorific value is obtained with a saturation temperature of from between 120 and 130 degrees, with a maximum at 125 degrees. In fact, the highest figure attained (174 B.t.u. net at 62 degrees F.) resulted from a temperature of 125 degrees. As for the time of the year, there does not seem to be any period or month in which the high figures are localized. The average saturation temperature for the entire 14 months was 123.4 degrees, including the higher temperatures used experimentally up to 145 degrees, and then abandoned in favor of the more satisfactory lower ones.

TABLE IV. GAS ANALYSES ACCORDING TO GAS TEMPERATURES

Gas temperature	No. of analyses	Temp. of air-blast	Combustibles					Non-combustibles			Calorific value net at 62 in.
			CO	CH_4	C_2H_4	H_2	Total	CO_2	N_2	Total	
Deg. F.		Deg. F.	%	%	%	%	%	%	%	%	B.t.u.
1250	4	116.0	24.60	2.42	0.83	13.73	41.58	4.93	53.49	58.42	151.3
1300	4	122.0	24.34	2.47	0.76	14.42	41.89	5.05	54.06	59.11	151.6
1340	33	127.5	23.39	2.24	0.84	16.42	42.95	5.72	51.33	57.05	153.2
1350	32	126.9	23.96	2.19	0.85	16.27	43.27	5.50	51.23	56.73	154.3
1360	86	121.3	25.50	2.44	0.82	14.33	43.09	4.69	52.22	56.91	155.8
1380	20	119.7	25.25	2.09	0.93	14.08	42.27	4.79	52.94	57.73	153.0
1390	2	116.8	25.95	2.64	1.32	12.69	42.60	4.46	52.96	57.40	162.3
1400	72	120.0	24.70	2.19	0.89	14.80	42.58	5.20	52.22	57.42	153.3
1420	18	120.5	24.65	2.12	0.89	14.24	41.95	4.93	53.17	58.10	151.1
1430	1	118.0	26.30	1.92	0.81	14.63	43.66	4.64	51.70	56.34	154.2
1440	17	125.4	26.30	2.31	0.85	13.15	42.61	6.45	50.94	57.39	154.2
1450	1	130.0	25.63	2.30	0.92	14.15	43.00	6.10	50.90	57.00	156.0
1460	35	127.5	25.90	2.20	0.85	13.20	42.15	5.40	52.45	57.85	152.1
1480	53	126.1	26.50	2.42	0.87	12.12	41.91	5.14	52.95	58.09	153.4
1540	2	125.0	25.82	2.32	0.81	12.00	42.95	5.95	53.10	59.05	149.2
Average											
1395	1	123.4	25.00	2.27	0.87	14.49	42.63	4.69	52.68	57.37	153.9

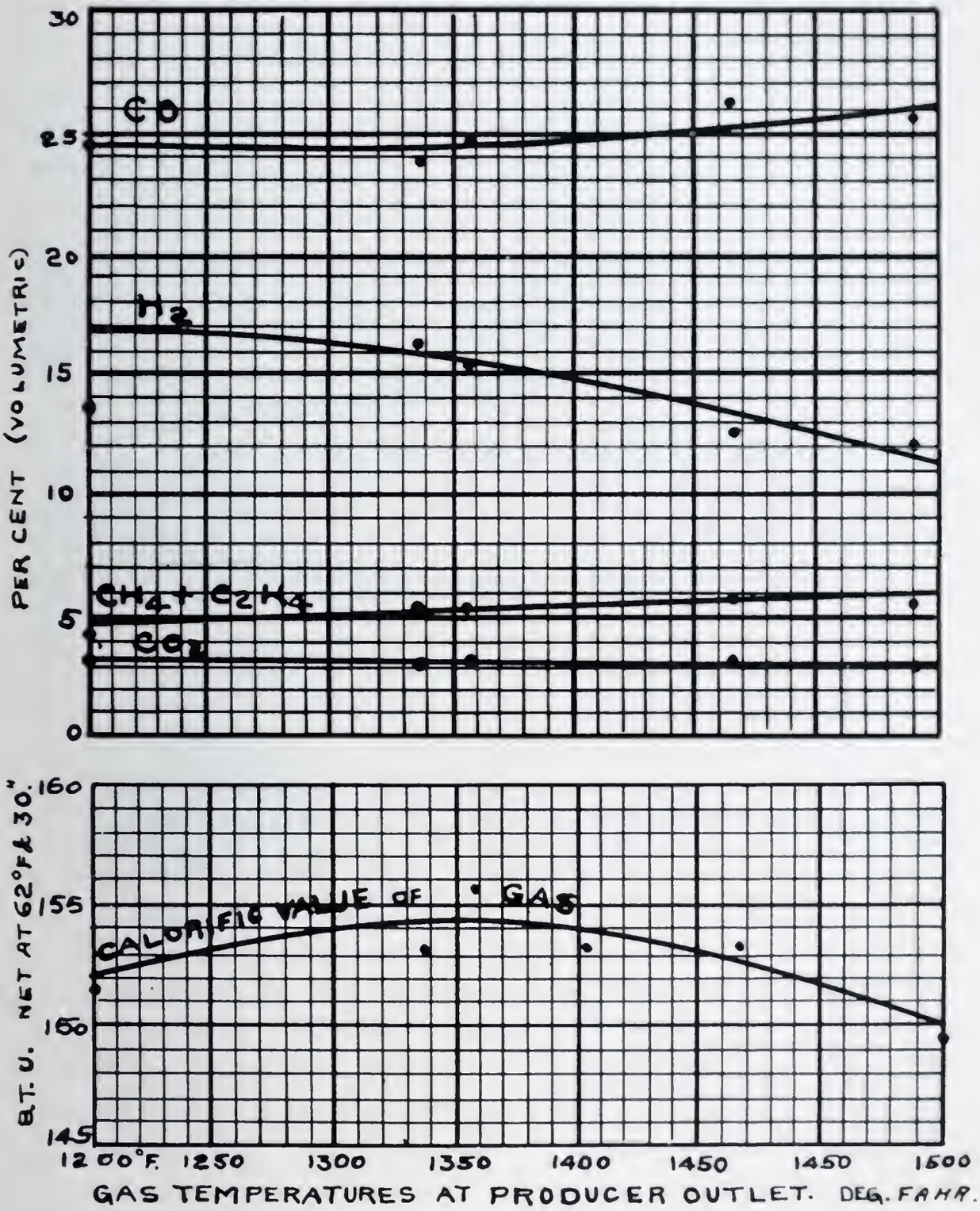

Fig. 3. Temperature of Humidified Air-Blast Related to Content of Hydrogen and Carbonic Oxids.

Table IV is a tabulation based on the gas temperatures, ranging from 1250 to 1540 degrees. Fig. 3 contains plottings of the calorific values, or the heats of combustion of the gas, and of curves of the principal constituents of the gas. The most advantageous range of temperature is from 1250 to 1450 degrees. Above and below these temperatures the heat of combustion falls off materially. Turning to a consideration of the gas constituents, it seems that, within the scope

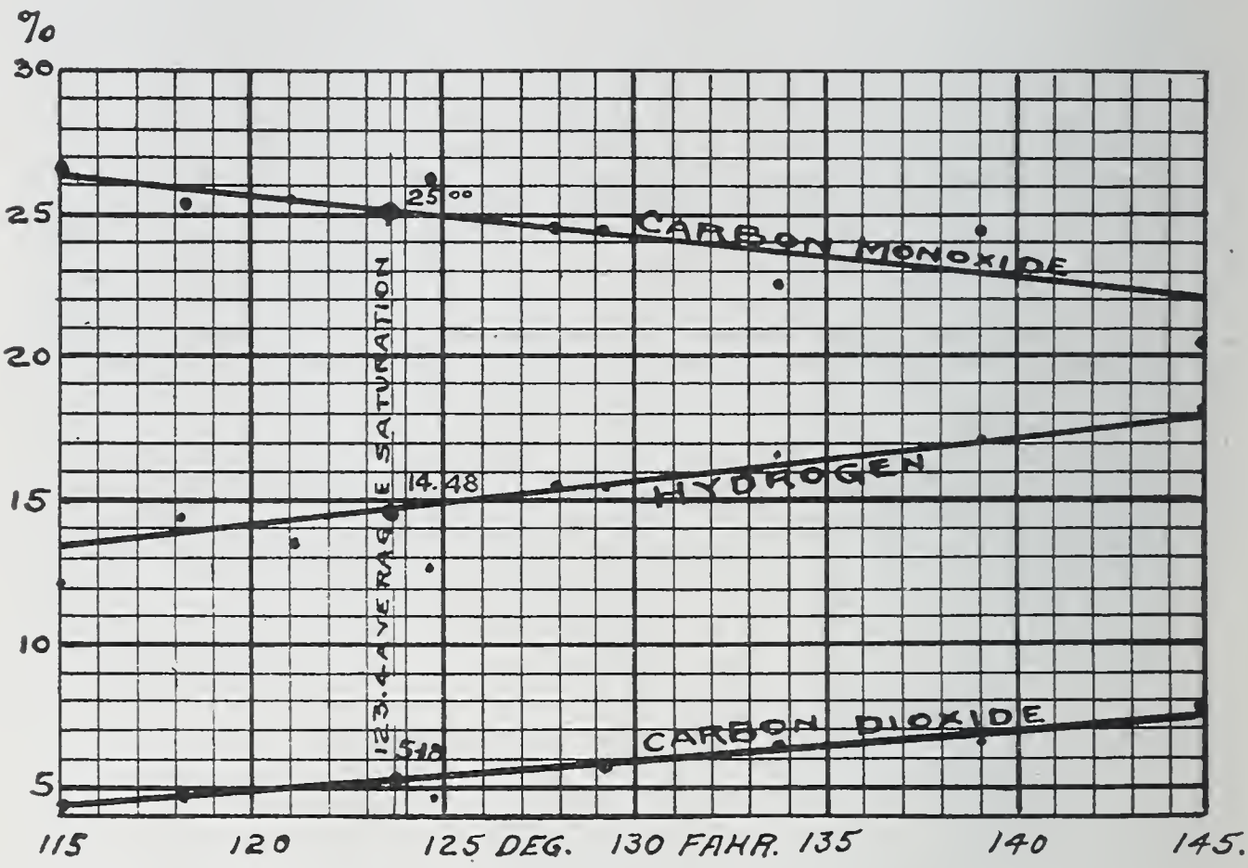

Fig. 4. Gasification Performance Referred to Gas Temperature.

of the records, there exists a slight tendency towards a rise of the carbon monoxid, accompanied by a drop of the carbon dioxid, and also of a rise in the temperature. This is reasonable, as a higher temperature is evidence of a greater chemical activity, rendering more certain an absorption of another atom of carbon by a molecule of carbon dioxid as it rises into the reducing zone of the fire. The great drop in the hydrogen accounts for the lowering of the calorific value of gas as the temperature rises. This is not a serious matter, as already explained.

The relationship between the fusing temperature of the ash, the fineness of the coal, and the temperature of the air-blast of a few

other coals, shows the general desirability of a low percentage of fines and a high ash-fusing point.

	Size	Ash fusion degrees F.	Air-blast degrees F.
Indiana (Pike County).....	2- to 4-inch	2530	130
Pennsylvania (Upper Freeport)	30% fines	2175	138
Indiana (Pike County).....	70% fines	2500	138
Illinois (Williamson County)....	2- to 3-inch	2480	138
Illinois (LaSalle County).....	75% fines	1970	145
Illinois (LaSalle County) gasified in "XYZ" producer....	75% fines	1970	165

The heat balance of the gasification of coal from the Pittsburgh vein is given in Table II. The detailed calculations are to be found at the end of this paper. The total useful heat of gasification is 88.20 per cent., which is the measure of the efficiency of the gas-producer operation.

The customary way of figuring the heat of combustion of coal is to use "gross" values of the heat of combustion of hydrogen and hydrogen compounds. This is incorporated in the code of the American Society of Mechanical Engineers for boiler and gas-producer trials. In this gross value is included the latent heat of vaporization of the water vapor formed by the combustion of the hydrogen of the fuel. This amounts to 10.033 B.t.u. per pound of hydrogen. In the arts this release of heat is not available, as the necessary condensation from gaseous vapor does not occur until the gases have passed out from the furnace up into the atmosphere, where the heat can not be used. The Chemists' Committee of the United States Steel Corporation recognized this fact, and recommends the use of the "net" value in figuring the heat of combustion of producer and other gases. The heat of combustion of the coal in the "heat balance" is figured "gross," in accordance with the code of the American Society of Mechanical Engineers, while the gas is figured "net." To reconcile the assumptions and obtain a true balance of the account, it becomes necessary to introduce in the credit side a figure of 666.6 B.t.u. to represent this difference for the gasification of one pound of coal.

The heat balance brings out a notable fact. The gas analyses, as ordinarily made, are with the use of aqueous solutions of the various chemicals of the laboratory. Whatever tar is in the gas appears as a true vapor of infinitely small particles of liquid tar. These particles are all washed out and lost. The figure reported for the heat of combustion of the gas is for washed, clean gas; but this represents only a part of the combustible output of the producer. At the writer's request a determination of the tar content of producer gas was made and reported by the chief engineer of one of the large steel-works in the west. Under the then operating conditions it was found that the gas was loaded with tar vapor, to the extent of 12 gallons of tar per ton of coal gasified. At the gas-valve of the furnace using the gas, 11¼ gallons of tar were delivered to the furnace. In spite of the flues being long and tortuous only ¾ of a gallon of tar was lost by condensation. The net heat of combustion of the gas is 153.9 B.t.u.,* to which must be added the heat of combustion of the tar, which is equal to 14.7 B.t.u. additional, making the effective heat of combustion equal to 168.6 B.t.u., net. The total supply of heat of the input to the producer is 194.8 B.t.u., corresponding to an efficiency of the operation of 88.3 per cent. for hot, raw gas.

There are some heating processes in which a clean gas is required, thus making it advisable to sacrifice the sensible heat of the hot gas. The accompanying heat balance of cold, clean gas shows that additional losses due to cooling and washing the gas amount to 18.55 per cent. This corresponds to an efficiency of 69.64 per cent. This cold, washed gas will be saturated with water vapor taken up in passing through the scrubber. Considering the temperature at the burner, where the gas is assumed to be 62 degrees F., the moisture is sufficient in quantity to absorb 1.6 B.t.u., making a final effective value of 152.3 B.t.u.

For permission to make use of the basic data in the preparation of this paper, the writer acknowledges his appreciation to Mr. L. J. Pierce, chief engineer of the American Window Glass Company.

Below is a heat balance of hot, raw producer gas from screened bituminous coal from the Pittsburgh vein, Westmoreland County,

*Since the writing of this paper the author has received the third edition of the "Methods of the Chemists of the United States Steel Corporation for the Sampling and Analysis of Gases." In this edition the base temperature is taken at 60 degrees F. instead of 62 degrees. Recalculating the heat of combustion of the gas accordingly, the value is raised from 153.9 to 154.3 B.t.u.

Pennsylvania, gasified in Wellman-Seaver-Morgan gas-producer, Type L, No. 10. Basis, 1.0 pound of coal as charged.

Dr.	B.t.u.	Per cent.
Gross heat of combustion, per pound of coal as charged	13,936.0	98.44
Sensible heat, coal above 62 degrees F.	0.0	0.00
Sensible heat, steam above 62 degrees F.	218.2	1.56
Sensible heat, air above 62 degrees F.	0.0	0.00
Total heat delivered to the producer	14,154.2	100.00
Cr.		
Heat of combustion of 64.1 cubic feet gas "net" at 62 degrees F.	9,865.1	69.64
Sensible heat of 64.1 cubic feet gas above 62 degrees F.	1,684.6	11.90
Heat of combustion of 0.06 pound tar	942.9	6.66
Sensible heat of 0.06 pound tar	16.0	0.11
Total heat available for use	12,508.6	88.31
Expenditures and losses		
Heat absorbed by 1.54 per cent. moisture in the coal	25.4	0.23
Ashes (unburnt carbon), 0.00877 pound	127.6	0.90
Ashes, sensible heat, 0.09141 pound above 62 degrees F.	0.5	.....
Soot deposited in the flue (unburnt carbon), 0.0090 pound	130.9	0.90
Tar deposited in the flue (unburnt carbon), 0.005 pound	78.6	0.50
Heat lost in cooling water of poker and gas coals	52.2	0.40
Heat equivalent of static pressure and velocity of gas	1.5	0.01
Radiation and other unaccounted losses	568.9	4.05
Total expenditure and losses	1,645.6	11.69
Total	14,154.2	100.00

The following is a heat balance of cold, clean producer gas under the same conditions.

Dr.

Refer to the heat balance of hot, raw producer gas, above.

Cr.	B.t.u.	Per cent.
The items remain the same except that the total of useful heat is only the heat of combustion of 64.1 cubic feet of gas, which is	9,865.1	69.64

Expenditures and losses

The losses are increased by washing the gas in water, whereby the tar vapor is washed out, and the sensible heat of the gas above 62 degrees is lost by passing from the gas to the wash water.		
Sensible heat of the gas	1,684.6	11.90
Calorific value of the tar	942.9	6.66
Sensible heat of the tar	16.0	0.11
Losses due to washing gas	2,643.5	18.67
Expenditures and losses incidental to gas making (hot raw gas)	1,645.6	11.69
Total expenditures and losses of clean gas	4,289.1	30.36

These large losses notwithstanding, there are many industrial processes which require clean gas, and to which the benefits of clean gas far outweigh the heat losses noted above and justify the use of cold, clean producer gas.

Details of the calculation of the heat balance are given below.

CALORIFIC VALUE OF COAL

Heat of combustion of coal as reported by American Window Glass Company

Per pound of dry coal, "gross" value at 62 degrees F.....14,155 B.t.u.

Per pound of coal as charged into the producer (100 per cent. — 1.54 per cent. = 98.46 per cent. of 14,155 B.t.u.).....13,936 B.t.u.

SENSIBLE HEAT OF STEAM, IN AIR-BLAST

As the steam used is the exhaust steam after passing through the steam-turbine of the blower, it passes out at an exhaust pressure of possibly two pounds back-pressure. The heat given to the air is the difference between the total heat at that pressure and the "heat of the liquid" at 62 degrees F. Taking the total amount of steam per pound of coal 0.20 pound at the average exhaust steam pressure used at two pounds, we have 1153.1 B.t.u — 62.0 = 1091.1 $\times$ 0.2 = 218.2 B.t.u.

TAR

From a private communication from the chief engineer of a large plant using Wellman-Seaver-Morgan Type L producers

	Pound	Per cent.
Tar per pound of gas at producer exit	0.01425	100.00
Tar per pound of gas at open-hearth furnace valve	0.01304	91.56
Tar per pound of gas condensed in flues	0.00121	8.44

Assume tar to be carbon, 80 per cent.; hydrogen, 8 per cent.; and oxygen, 12 per cent.

Assume gas at 64 cubic feet per pound of coal at 0.065755 pound = 4.21 pounds of gas per pound of coal.

Then for each pound of coal gasified in:

Tar gas at producer.....	0.01425 pound × 4.21 =	0.05999 pound
Tar gas at furnace.....	0.01304 pound × 4.21 =	0.05490 pound
Tar gas lost by condensation in flues.....		0.00509 pound

Trinks, "Industrial Furnaces," vol. 2, page 2, gives an average tar content of 0.000625 pound per cubic foot of gas, which is equal to 0.040 pound per pound of coal, or two-thirds the above figure of 0.05999—say 0.05 pound.

Tar per ton of coal in gas at producer.	2000 × 0.05999 ÷ 9.75 =	12.00 gallon
Tar per ton of coal in gas at valve	2000 × 0.05490 ÷ 9.75 =	11.25 gallon
Tar per ton of coal lost.....		0.75 gallon

Tar per ton of coal lost....0.75 gallon × 9.75 = 7.5125 pounds per ton of coal

DISPOSITION AND COMPONENTS OF TAR

	Per lb. B.t.u.	Put in furnace B.t.u.	Lost in flue B.t.u.	Total B.t.u.
C	at 14,544 ×	0.04392 lb. = 638.7 ×	0.004072 lb. = 58.2 ×	0.04792 = 694.9
H	at 51,364 ×	0.00439 lb. = 225.6 ×	0.000407 lb. = 20.4 ×	0.00479 = 246.0
O		0.00656	0.000611	0.00719
Total.....		0.0549 lb. = 864.3 ×	0.00509 lb. = 78.6 ×	0.0599 = 932.9

SOOT

Assumed at 1.0 per cent. of the weight of the coal, also to be carbon 90 per cent., ash 10 per cent. Carbon loss = 0.009 pound = 130.9 B.t.u.

ASHES

Ash in the coal, 8.26 per cent. Combustible in the ashes, 9.6 per cent.

Weight of carbon per pound of coal used (C_1) = 0.7671 pound, carbon in ashes (C_2) = 0.0960 pound.

Weight of carbon per pound of coal used (A_1) = 0.0826 pound.

Then weight of carbon in one pound of net ashes = (C_2) ÷ (1 — C_2) = 0.096 ÷ (1 — 0.096 = 0.904) = 0.1062.

Then weight of carbon in one pound of coal lost in the ashes = (A_1) $\frac{C_2}{1 - C_2}$ = 0.0826 × 0.1062 = C_3 = 0.00877 pound.

Weight of carbon in one pound of coal which is gasified = $C_1 - C_3$ = C_4 = 0.75835 pound.

Carbon gasified = C_4 ÷ C_1 = 0.75833 ÷ 0.7671 = 0.9836 × 100 per cent. = 98.86 per cent.

Carbon lost in ashes = 1.14 per cent.

Calorific value of carbon lost in ashes = 14,544 B.t.u. × 0.00577 = 127.6 B.t.u.

SENSIBLE HEAT OF ASHES, LOST

Ashes = 0.0826 pound true ash = 0.00877 pound of carbon lost = 0.09137 pound.

Temperature of discharge 90 degrees (28 degrees above 62 degrees) specific heat = 0.2.

Heat lost = 0.09127 × 28 × 0.2 = 0.51 B.t.u. per pound of coal used.

VOLUME OF GAS, CALORIFIC VALUE

1	2	3	4	5	6	7	8	9	10
	Volume per cubic foot of gas	Weight per cubic foot, pound	Weight in one cubic foot of producer gas, pound	Ratio of atomic weights	Weight of carbon in one cubic foot gas	Calorific value in one cubic foot B.t.u.	Specific heat one degree	Total specific heat 1330 degrees	B.t.u.
CO	0.2500	0.07635	0.019038	12/28	0.008180	80.6	0.0189	25.137	6.284
CH_4	0.0227	0.04232	0.000961	12/16	0.000721	20.7	0.0359	47.747	1.084
C_2H_4	0.0087	0.07445	0.000648	24/28	0.000555	12.9	0.0454	60.482	0.526
CO_2	0.0469	0.11671	0.005474	12/44	0.001493		0.0295	25.669	3.719
H_2	0.1449	0.005306	0.000769			39.7	0.0193	39.235	1.840
N_2	0.5268	0.07368	0.038815				0.0183	24.335	12.819
Total	1.000		0.065755		0.010949	153.9			26.272

NET WEIGHT OF CARBON GASIFIED

Carbon in coal = 0.7671 pound — (carbon in tar 0.0479) + (carbon in soot 0.009) + (carbon in ashes 0.00877) = 0.0657 pound = 0.7014 pound.

Volume of gas made = 0.7014 pound ÷ 0.010949 = 64.1 cubic feet.

Heat of combustion of gas, 153.9 B.t.u. × 64.1 cubic feet = 9,865.6 B.t.u. net at 62 degrees F.

Heat of combustion of gas, 164.2 B.t.u. × 64.1 cubic feet = 10,525.2 B.t.u. gross at 62 degrees F.

Difference between gross and net ..... 660.2 B.t.u.

ENRICHMENT OF GAS BY TAR

Net available calorific value of tar, 564.3 B.t.u. ÷ 64.1 cubic feet = 13.5 B.t.u.

Net calorific value of enriched gas, 153.9 + 13.5 per cubic foot = 167.4 B.t.u.

Per pound of coal used.....9865.0 B.t.u. + 864.3 B.t.u. = 10,729.3 B.t.u.

AIR REQUIRED AND SENSIBLE HEAT

	Pounds
Nitrogen per cubic foot gas = 0.038815 pound × 64.1 cubic feet =	2.4880
Nitrogen in one pound of coal (by analysis)	0.0151
Nitrogen required from the air of the air-blast	2.4729

Weight of air for 2.4729 pounds nitrogen = 2.4729 ÷ 0.0769 (76.9 per cent. nitrogen in air) = 3.2157 pounds.

Volume of air for 2.4729 pounds, 3.2157 ÷ 0.07634 pound = 42.124 cubic feet.

Sensible heat above 62 degrees F., 3.2127 × 0.2 (specific heat) × 0.0 degree above 62 degrees = 0.00 B.t.u.

STEAM USED FOR AIR-BLAST SATURATION

Air per pound of coal	3.2157 pounds
Nitrogen in the air	2.4729 pounds
Weight of oxygen supplied by the air	0.7428 pounds
CO = 0.019088 pound × 64.1 cubic feet = 1.2235 pound × 16/28 =	0.6991 pound oxygen
CO_2 = 0.005474 pound × 64.1 cubic feet = 0.338 pound × 32/44 =	0.2458 pound oxygen
Oxygen in gas per pound of coal	0.9449 pound
Oxygen from the air	0.7428 pound
Oxygen from atmospheric moisture and steam	0.2021 pound

Atmospheric moisture at 62 degrees F. and 60 per cent. relative humidity = 6.25 grains × 60 per cent. = 3.75 × 42.124 cubic feet = 0.02180 per pound of coal.

Oxygen, 0.02180 pound × 16/13 = 0.0193 pound per pound of coal	0.0193 pound
Oxygen to be had from steam	0.1828 pound
Weight of steam 0.1828 pound × 9/8	0.20 pound

COOLING WATER

Water per producer hour (270 gallons)	2240.0 pounds
Coal per producer hour	2500.0 pounds
Water per pound of coal	0.9 pound
Rise in temperature	58.0 degrees
Sensible heat = 0.9 × 58 × 1.0 (specific heat)	52.2 B.t.u.

HEAT ABSORBED BY MOISTURE OF THE COAL

At 212 degrees total heat above 62 degrees per pound of steam	1084.6 B.t.u.
Heat in 0.0154 pound of steam (moisture in coal)	16.7 B.t.u.
Heat in 0.0154 pound of steam at 1395 degrees above 212 specific heat (0.48) × (1395 — 212 = 1163) × 0.0154 pound	8.7 B.t.u.
Total heat absorbed in the producer by the moisture in coal	25.4 B.t.u

HEAT USED IN STATIC PRESSURE AND VELOCITY OF GAS AT PRODUCER OUTLET

Weight of gas discharged from the producer per minute = 175.4 pounds.

Gas pressure in producer top = 1.25 inch H_2O = 0.0450 pound per square inch.

One cubic foot of gas at 62 degrees F. = 0.065755 pound.

One cubic foot of gas at 1395 degrees F. =

$$\left(\frac{\text{521 degrees absolute temperature}}{\text{1854 degrees absolute temperature}} = 0.282\right) \times 0.065755.$$

One cubic foot of gas = 0.018545 pound.

Pressure of gas at 1395 degrees F., one square inch in area, one inch high $= \frac{0.018543}{144} = 0.000129$ pound per square inch.

A volume of gas for 1¼-inch water pressure =

$$\frac{0.0450 \text{ pound per square inch}}{0.000129 \text{ pound per square inch}} = 348.5 \text{ feet.}$$

Gas velocity in feet per second $= \sqrt{2GH}$

$= \sqrt{64.4 \times 348.8}$

$= \sqrt{22{,}466} = 149.0$ feet per second.

Energy = (149.0 feet per second velocity)

$$\left(\frac{175.4 \text{ pounds per minute}}{60} = 2.92 \text{ pounds per second.}\right)$$

= 435.0 foot-pounds per second ÷ 777.5 = 0.566 B.t.u. per second.

= 0.566 × 60 = 33.36 B.t.u. per minute.

Coal gasified per minute = 2500 ÷ 60 = 41.67 pounds.

= 33.36 ÷ 41.67 = 0.8 B.t.u. per pound of coal, static pressure.

ENERGY USED IN SECURING GAS VELOCITY

Gas made per minute

$$\frac{2500 \text{ pounds} \times 64.1 = 160{,}250 \text{ cubic feet}}{60} = 4671 \text{ cubic feet.}$$

Gas made per minute at 1395 degrees F. =

$$4761 \times \left(\frac{1854 \text{ degrees absolute temperature}}{521 \text{ degrees absolute temperature}} = 3.56\right) = 16{,}629 \text{ cubic feet.}$$

Gas velocity per minute = 16,629 × 12.55 (outlet) = 1324 lineal feet.

$$\text{Energy used for velocity} = \frac{1324 \times 175.4 = 232{,}230 \text{ foot-pounds}}{777.5 \text{ B.t.u.}}$$

= 298.7 B.t.u. per minute.

= 298.7 ÷ 41.67 = 0.7 B.t.u. per pound of coal.

Total energy absorbed by the gas = 0.8 + 0.7 = 1.5 B.t.u. per pound of coal.

DISCUSSION

W. B. Chapman:* One comes to a meeting of this sort to get the latest information on the subject under discussion, and I think we have been given some really valuable material for those interested in producer gas. A meeting like this should also bring out some progress in new fields of application, and the relative merits of various producer features might be advantageously discussed.

Users of producer gas are beginning to realize that more study and attention should be given to the design and operation of their equipment. In many plants, more money is lost in the producer-gas

*President Chapman Engineering Co., New York.

house than in any other department. In 1905, I suggested that rods be put into the producer occasionally and allowed to become red hot in order to determine the location and extent of the hot zone of the fire bed. No one had ever heard of such a thing, but it has now become standard practice. Every few hours a rod should be put into the producer to determine the location of the hot zone. If one does not know where the hot zone is and about how hot it is, and how thick it is, he hasn't a Chinaman's chance of operating his producers efficiently. The same is true with regard to keeping track of the temperature of the steam and air-blast. Possibly 10 per cent. of the producer installations in the United States are now being properly operated, whereas 20 years ago there were none. We are making progress, but it is needlessly slow. There are only four companies in the United States making mechanical producers for general purposes. They have all been working on the problems involved for over 20 years, using a very generous proportion of their profits for experimental work, and yet the problem of making producer gas automatically and efficiently from any grade of coal without requiring any hand poking has not been solved. It is more difficult than any mechanical problem I know of, for most of the factors are variables.

Unfortunately there are no plants where all up-to-date producer designs are in operation using the same fuel under the same conditions, so we have to judge the merits of a producer by other things. In a gas-producer we want an even temperature and an even density across the fire bed. The most important condition in the fire bed of a gas-producer is "horizontal uniformity." Every layer must in itself be uniform in temperature and uniform in density. The design of producer in which these conditions can be most easily maintained is probably the best, and that producer in which it is most difficult to maintain those conditions is probably the worst. I am not thinking of any particular make of producer. We are too prone to think in terms of machinery. It is the fire bed requirements we should consider, for it is the condition of the fire bed and not the machinery that determines the gas. In Europe, in practice, the lower portion of the fire bed is the only part that is agitated. In this country, we have neglected agitation from beneath and mostly agitate the top of the fire bed. In Europe, when they agitate the bottom of the fire bed, they double the capacity. In this country, when we agitate the top of the

fire bed, we double the capacity. It is my belief that for the best results a producer should be agitated both from the top and the bottom. We have found during the past two years that agitation from beneath should not be as severe as agitation from the top. It will destroy good gas-making conditions if the bottom is unduly agitated while the producer is operating at low capacity, but there is little chance of over-agitation while operating at high capacity. We have gone so far as to agitate the bottom of the fire without any top agitation at all when using coke fuel and have obtained excellent results. We have been able to gasify 100 pounds of coke per square foot with agitation only from beneath and none from above, and at the same time have obtained greater uniformity in the gas than anything I have seen elsewhere in any producer. We therefore favor "bottom agitation."

When one has to select the best producer for general use he should bear in mind those conditions that make for "horizontal uniformity" both in temperature and density. There should be considerable agitation throughout the top of the fire bed and a moderate amount of agitation from beneath, and, of course, there should be continuous ash removal. In manufacturing water-gas, the clinkers are worse than in making producer gas. The generator has to be shut down about every fourteen hours to remove the clinkers and most of the fire bed. This takes eight men using sledge hammers, big bars and jets of water about two hours. We now have several water-gas generators in continuous operation requiring no hand manipulation whatever, and the gas is better. The agitation is only from beneath.

W. N. Flanagan:* After the wonderful presentation of facts we have heard to-night I do not think it would be wise for me to try to offer any generalities. I was certainly pleased to hear the results of the very comprehensive tests that Mr. Windett, through the courtesy of the American Window Glass Company, gave us to-night—practical tests as the result of operating conditions over such a long period that you can hardly call them test results.

Mr. Chapman's remarks brought up a question which I have long had in mind, but which I have never had the opportunity to determine. Why not agitate the fuel bed from below and do so with a

*Special Engineer, Carnegie Steel Co., Pittsburgh.

set of deeply corrugated rolls, similar to the clinker grinders used in connection with underfeed stokers, which would also remove the ash?

The discussion to-night and some literature which I have read recently have been very interesting, as they indicate the use of bottom agitation and also suggest the idea of making a gas-producer of square or rectangular cross-section to facilitate agitation and air distribution.

H. Dobrin:* There is not very much to be added to what Mr. Windett has brought out in his paper. Mr. Chapman in his discussion certainly made some illuminating remarks. He brought out the point that there are only some four manufacturers actively engaged in producer manufacture. I also gather that there is a total of about a million dollars spent annually by American industry for producers. This, in view of the fact that Mr. Herbert Hoover is credited with the assertion that American industry experiences a billion dollars a year of easily preventable fuel waste, should give us food for thought. There certainly appears to be ample room for educational endeavor regarding the possibilities of fuel economy.

Now the point I would like to touch on goes just a little bit further than Mr. Windett's paper in that it does not exactly concern itself with producer operation, but more with regard to the education of our executive managers on the importance of spending money for fuel-burning equipment.

We saw on the screen a picture of a spacious producer house with clean, tiled floors. This is something really new. We have all been around many gas-producer houses. We are all ready to admit that of all the places in the average plant, it is the dirtiest, and usually without proper light and ventilation; and yet, in most instances, it is the very heart of the operation. In the glass or the steel industry in the absence of other fuels, producer fuel is indispensable. You know that these conditions that I have described are true, and as Mr. Chapman so ably brought out in his remarks, it is a question of education, and also a question of agitation on this subject. The men who operate plants must be made to realize the importance of the function of the heating operation.

When we start with the question of producer gas or producer houses, the entire question of fuel combustion and furnaces opens

*Consulting Fuel Engineer, Birmingham, Ala.

itself before us. The same neglect that is permitted in the producer house is also permitted with respect to the treatment accorded to the very furnaces themselves. It is nothing unusual to walk through a plant and to see the average furnace having holes in places where there should not be any. Some heater wants a hole in a certain place and he immediately proceeds to tear one in the furnace. If he did that to a machine he would be fired instantly. No one seems to worry about what happens to furnaces.

By contrast, go through the electrical power-houses, and you will find everything neat, with good light, ventilation, tile flooring and walls. Does it not seem as if the producer house and its important function were treated as a stepchild by the executive?

I believe that this condition is due largely to the personnel. In the electrical department or power-house you will find highly trained men, and in the other case you will find day labor or almost unskilled labor.

I also believe that the solution lies in the possibility of bringing the operation of the gas house or the gas-producer to the dignity of a position higher than the job of a day laborer.

That a great deal of money is lost by the failure on the part of our executive managers to realize these conditions is without question. Just to cite an instance, it is unimportant as to the particular plant which I have in mind, as you will find these conditions prevailing everywhere to a greater or lesser degree. In one plant where I happen to know that some 50,000 tons of coal are being fed into the producers annually, only some 7500 tons are theoretically required to heat this steel—the other 42,500 tons are lost for various causes. It is, therefore, the recoverable margin between the actual efficiency experienced and the possible efficiency that could be obtained which should be the subject of thought on the part of the men who are responsible for these vast expenditures for fuel.

Mr. Windett brought out in his paper that the efficiency obtained in the conversion of the coal into gas is some 89 per cent., or 69 per cent. in the case of clean gas. Regardless of these efficiencies, what are the ultimate efficiencies when this fuel is being used in the furnaces? Who knows what real efficiencies are obtained in the average obsolete hand-fired, hand-poked producer? The facts are that there have not even been any measuring devices perfected so that one could

demonstrate beyond a doubt how much gas is actually being delivered to the fuel-using units in the plant. The facts further remain that, regardless of the efficiencies of the producer in its capacity of generating gas, the thermal efficiency for the finished, heated product hardly amounts to 20 per cent.

The conclusion, therefore, is obvious—that the largest possible return is to be sought in the producer and in the fuel-burning units in the plant, and that there is untold wealth buried under the coal pile.

It is pleasing to see people going into something so important, and inasmuch as the figures presented by Mr. Windett represent actual operating conditions, they are worth more than if they were merely theoretical deductions.

Clay Sprecher:* I would like to ask one question. I had a little lapse of attention when you touched on a point that is interesting to me and that is the use of exhaust steam instead of high-pressure steam through the turbo-blower. Was your comment favorable to the usage of exhaust steam or low-pressure steam in that connection or was it unfavorable to its use?

Victor Windett: Answering Mr. Sprecher's inquiry as to the use of steam in the turbo-blower. Live steam is used for driving the turbine of the blower. The amount depends upon the work done by the fan in delivering the air to the combustion zone of the producer, and this is conditioned upon the volume of air required and the pressure necessary to deliver this volume to the fire. The pressure of the live steam so used ranges from 15 pounds pressure per square inch upward, according to the work to be done by the turbo-blower.

The exhaust steam from the turbine is then available for humidifying the ash. In case of an ash of high fusing temperature, relatively little steam is needed for the control of its clinkering tendency. Should the quantity be less than that exhausted from the turbine, the excess is discharged into the atmosphere. The gas man regulates the amount used in the air by combining control by means of the "saturation thermometer" and that afforded him by an occasional testing of the hardness or softness of the fire by a test rod. With an ash of exceedingly low fusing temperature all of the exhaust steam will be

*Sales Engineer, Pittsburgh.

put into the air supply to the producer, and in the worst cases this will be increased by the use of additional live steam.

The best producer operation seeks to use the least possible steam in the air supply for the purpose of keeping a low hydrogen content and an avoidance of moisture in the gas.

CLAY SPRECHER: Assuming that we have a motor-driven blower and exhaust steam available, will not the heat balance of your gas-producer operation be affected adversely by the use of exhaust steam? I bring up this point from an economic view. We have been accustomed in all our producer operation, more or less, to use high-pressure boiler steam for the operation of the gas-producer. We are blowing with a turbo-blower and we still use high-pressure boiler steam. If you have exhaust steam available is it not economy to use your exhaust steam and motorize the blower?

VICTOR WINDETT: The heat balance is a statement of credits and debits of heat in the producer operation. Should you use a motor-driven blower and also steam for the air saturation, and a supply of exhaust steam were available, it should, of course, be used instead of live steam for humidifying the air, provided the net results expressed in money justified the motor drive and the use of the exhaust steam. In such an event the steam item of the heat balance would appear at a proper valuation as exhaust steam and not live steam. In the average plant such an arrangement would be of doubtful utility on account of the probable wetness of the exhaust steam and the expense of the additional piping and attention.

CLAY SPRECHER: As far as drying is concerned, that is not always a difficult matter. A number of years ago I visited a plant with quite a number of gas-producers and those in charge commented on the condition of their steam. First they told me their gas was not very high in B.t.u. I asked them for an analysis, and it developed that they were getting an excess of water. I suggested that, as they had natural gas or producer gas convenient, it would pay to put in a superheater for the steam. They did it and saved about 20 per cent. That was one of our plants right here in the Pittsburgh district. We can easily do that if it is a case of drying the steam.

VICTOR WINDETT: Yes, it can be done. But it is essential for uniform producer operation to have the steam used in the air supply dry and perfectly free from occasional "slugs" of entrained water.

CLAY SPRECHER: You have in mind no objection to the use of exhaust steam for saturation processes?

VICTOR WINDETT: No.

CLAY SPRECHER: It is not done in steel plants, to my knowledge, but I believe it is done on producers in by-product coke operation. Possibly a representative of the Koppers Company would give us some information. It was my thought that this offered another field for economy and could be developed where you have steam available. I just wanted to know whether, in your estimation, it is practical or impractical.

VICTOR WINDETT: If the remarks about the American Sheet and Tin Plate Company refer to the Gary works, it might be added that the producers in use in the plant prior to the recent additions were put in a good many years ago, at the time of the erection of the original plant. Although these producers are from 11 to 17 years old and represent the best practice of that time, they are doing good work to-day. In the present year a large battery of producers of the type described in this paper has been installed.

In the case of low-grade coals there are instances in which the "fines" have approximated 90 per cent. in quantity. Such coals are usually high in ash, which generally has a low fusion point and clinkers easily. A somewhat high saturation temperature in the air-blast is required. They are not desirable gas coals, but can be gasified at upwards of 50 pounds of coal per square foot of producer cross-section per hour.

It is my idea that combustion engineers and steel-works operators agree that a high-hydrogen gas is undesirable, as, due to its lightness, much of the heat of combustion is liberated in or so near the furnace ports as to be nearly useless.

EMIL A. VIEROW:* As a technical student, but one who has had no practical experience with gas-producers, I would like to ask Mr.

*Student, Carnegie Institute of Technology, Pittsburgh.

Windett a question. In studying the problems of the gas-producer I have been very much puzzled by this matter of where and how much to agitate. You say that you dig into the fuel bed with a poker and keep turning the unburned carbon into "the eyes of the hot blast." On the other hand, there are producers which merely by the use of a leveler maintain the surface of the fuel bed even and thereby attain gasification rates as high as one hundred pounds per square foot and hour. How would you account for this?

VICTOR WINDETT: I have not discussed details of producer design or mechanical construction and operation, as it was my thought that this paper should be an exposition of the ordinary daily routine operation of a large producer installation in the hands of the factory personnel. As such, the technical information would be of interest and service to engineers and operators. For this reason I have carefully abstained from discussing features of design and operation of this gas-producer or of others on the market.

P. NICHOLLS:* I understand a great deal of importance is placed on air temperature, that air temperature also presumably being taken as a measure of the quantity of steam carried into the producer. I could not catch whether under these conditions the results show any distinction between operation in winter and in summer, with the varying amount of moisture there must be, if you take the air temperature as a measure of the steam. How under those conditions do you make the comparison on the basis of temperature without crediting the air with the quantity of steam that would be carried depending on the initial temperature of the air?

VICTOR WINDETT: The temperature of the air is taken in the supply-pipe as close as possible to the blast hood, where it enters the producer. The temperature is that of saturated air at this point. The moisture in the corresponding air is the sum of the atmospheric moisture and of the steam injected into the air. Inasmuch as the steam is that exhausted from the turbine, it is of no economic consequence if the total saturation is made up of much atmospheric and little steam moisture or vice versa, or if the air entering the blower is of low temperature in winter or high in summer. In either case the

*Heat Transmission Engineer, Pittsburgh Experiment Station, United States Bureau of Mines.

exhaust steam used leaves the turbine at practically no financial value. It may be useful to recall to our attention that practical considerations expressed in the cost-sheets of the process must serve as a limit to all engineering and research speculations and hypotheses.

P. Nicholls: You assume then that the condensed steam that was necessary to raise the temperature of the air was thrown out before it reaches the producers. It is probable, however, that the difference in moisture content is less than the effect of other operating conditions. A computation shows that, assuming that the steam is dry at 212 degrees F., the total moisture in it when the air is initially at 20 degrees F. is 11 per cent. greater than what it will be when the air starts at 80 degrees F. with 50 per cent. humidity, both assuming that the air enters the producer at 120 degrees F. This is approximately equivalent to a five-degree increase in entering air temperature on the strictly psychrometric water vapor assumption, or one might expect to obtain the optimum results with a temperature five degrees lower in winter time.

Victor Windett: The steam delivered to the blower should be dry.

H. Dobrin: When I mentioned figures before with respect to efficiencies, it was entirely immaterial to the spirit of this discussion as to whether it concerned or did not concern any particular plant, nor did I want the impression to go forth that I consider this an exceptionally bad condition. In fact, there are plants where the efficiency is not half as good. What I tried to bring out was, without any reference to any plant in the industry, that the importance of a paper such as Mr. Windett has given, is capable of incalculable good in helping to agitate this question and throw much needed light on the chaotic condition generally existing in regard to the whole question of fuel and fuel economy.

It is not always the fault of the man in charge of the fuel. Very often it is impossible to get the ear of the men who hold the purse strings, and the main problem seems to be to present the subject so as to get these men to visualize these conditions and to realize the importance of spending money for these improvements.

W. L. AFFELDER:* You spoke of the disadvantage of fine coal carrying a high ash. In a water-gas set, would it be feasible to use a coal which ordinarily would be a waste product, which ran as high as 30 per cent. ash and contained less than one per cent. sulphur? This particular product could be introduced into the producer in any desired size.

VICTOR WINDETT: The reference to "fines" in the coal may be explained as follows: Coal ordinarily should be crushed to pass through a three-inch ring to secure a complete gasification to the very center of the lump. The fines ordinarily should not run over 30 or 40 per cent., because a high proportion of fines is accompanied by a large quantity of coal-dust. This dust in dropping from the feed down to the combustion zone passes through a swiftly outflowing stream of incandescent gas. In this action, the volatile parts are distilled off, leaving particles of coke of say 60 per cent. of its original weight. Being then so light, many of these specks of coke are swept out into the flue system—a total loss of ungasified coke, which accumulates and becomes a nuisance to be removed at the end of the week.

W. L. AFFELDER: I do not think you got my question. I stated that this coal could be furnished in any desired size. Would it be economically feasible to use, in a water-gas set, coal running as high as 30 per cent. ash?

VICTOR WINDETT: I think this question should be referred to Mr. Chapman.

W. B. CHAPMAN: When liquid ash cools, it takes a set, somewhat after the manner of cement. If cement is given a jar while in the act of setting, many fine cracks will be formed and it will not adhere in a solid mass. The same is true in a mass of semi-liquid ash that has run together in the bottom of a producer. It needs a little agitation while in the act of setting. When American manufacturers of producers recognize this fact, and provide bottom agitation to meet it, it will be easier to make good gas.

*Assistant to President, Hillman Coal & Coke Co., Pittsburgh.

W. L. Affelder: The question was not hypothetical. A short distance from Pittsburgh the double Freeport coal seam covers a very large area. It contains a parting of anywhere from 8 to 15 inches near the middle of the seam. This parting is rather paradoxical in that it ordinarily runs about 30 per cent. ash but extremely low in sulphur—as low as ¾ per cent. This combination of ash and sulphur is decidedly unusual. This is a waste product in the mines now operating, and it is a very live question at the present time. This waste product could probably produce a certain quantity of very satisfactory water-gas if it could be physically handled in a producer.

I might say in this connection that I think I know what Mr. Chapman has in mind because Mr. Andrews and I have been working on the problem more or less, and I am hoping there will be a solution through a mechanically operated water-gas jet.

L. J. Reed:* I think the gentleman from Alabama has well referred to the difference between the central power-plant and the steel-mill boiler house. There is the same comparison between the tile-floored producer house he pictures and the ordinary steel-plant gas house. More money would willingly go into our gas houses if there were a feeling of assurance that the requisite return would be obtained on it. We have the same case here as in the boiler house. Many steam engineers and plant executives feel a large degree of hesitancy toward putting in a fully equipped modern boiler house and turning it over to cheap labor. They wonder if they can get the return that has justified refinement of equipment under the close direct control of technically trained men in some central-station power-plants.

All of us are familiar with the usual steel-plant gas house. If we were to be permitted to put in the tiled-floor gas houses, and had all the money necessary for complete equipment of pyrometers, thermometers and other control apparatus, could we do that practically without developing a different way of handling the problem and a different force from that existing at present, in order to get the results to justify that expenditure? I shall be interested in finding out what kind of force they have at Jeannette.

*Assistant Superintendent Steam Department, Aliquippa Works, Jones & Laughlin Steel Corporation, Woodlawn, Pa.

The saving that can be realized in gas-house operation has come to be much more fully recognized in the last two or three years and there is no more striking example of it than the gas-plant that we have considered to-night. I would like to have Mr. Windett, or some one from the American Window Glass Company, tell us whether they are running this plant with the ordinary gas-house force or whether they have built up a somewhat different type of operating organization.

Victor Windett: Answering Mr. L. J. Reed's inquiry, the operating force at Jeannette is composed of men of the average type and grade found in gas-plants. They are English speaking, intelligent, and give to their work the attention which an intelligent foreman customarily demands.

Answering Mr. E. A. Vierow, the poking of a producer is a matter determined by experience, exactly as the "slicing" of the fire in a boiler fire-box, or the poking of the fire in a blacksmith's forge. It can not be mathematically analyzed. However, its results are known, such as keeping the fire free and open for gasification and unobstructed up-flow of the gas, and the rubbing of the ever-appearing ash off from the faces of a piece of coal as the carbon is oxidized. Its action is productive of an intensified delivery of gas. In the same way the action of the periodic shearing and loosening of the ash bed through the working of the ash-pan stop loosens the body of the ashes through which the air-blast flows to the fire. This reduces the friction of flow of the air, thereby increases the quantity reaching the fire, and increases the rate of gasification. A rapidly working producer is more regular in output, as regards both quantity and quality.

ENGINEERING ANALYSIS APPLIED TO MUNICIPAL WATERWORKS*

By William Shaw†

In public works, money expended must be met by specific appropriations. Ultimately this money comes from such sources as bond issues, taxes, water rents, etc. Major improvements usually are paid for by bond issues.

It logically follows that a pumping station, for example, thoroughly modern when built, is kept in service until a more or less complete rebuilding becomes necessary, and until funds are available.

Engineering applied to rehabilitation is quite distinct from the design of new work.

Municipal finance is very different from the finance of private corporations, since the lower interest rates, absence of taxes, etc., greatly reduce the carrying charges on funds applied to public improvements.

This paper is presented to give an example of a special engineering study covering a city pumping station. It is simply a study to present data to the city management outlining comparative costs of a new electrically operated pumping station and a rehabilitated steam-operated station.

This study is concerned with comparison of costs for steam-driven and electrically driven units at Brilliant pumping station of the Pittsburgh waterworks.

Object. The object of this study is to determine which will prove the more economical (1) to expend money for the improvements necessary for the continued successful operation of the present steam-operated station, or (2) to erect a new station equipped with electrically driven units.

Basis of Comparison. No attempt is made herein to estimate the present value of the existing station; in fact, it is assumed that this station has no value. This is done to avoid a comparison of annual costs containing charges which are more or less fictitious.

*Presented February 1, 1927. Received for publication January 24, 1928.
†Power Engineer, Bureau of Water, City of Pittsburgh.

The annual costs referred to in this study for both the steam and electrically operated stations consist of operating charges plus fixed charges on new equipment only. The fixed charges cover interest on the investment, which is assumed to be four per cent., and depreciation which is based upon the expected useful life of the new equipment.

The average expected life of the equipment for the new elecerically operated station is assumed to be 20 years. Therefore, in order to make a fair comparison, it will be necessary to predetermine the dates of renewals of equipment for the existing steam-operated station, until completion of rehabilitation, for the purpose of determining the average annual cost over a period of 20 years.

Brief Description of Existing Station. The present pumping equipment consists of four 12 m.g.d. pumps which are 30 years old; four 15 m.g.d. pumps, two of which are 22 years old and two 19 years old. All of these are driven by compound engines. There is also an eight m.g.d. pump equipped with a triple-expansion engine which is seldom operated, since it is too small to be of real service.

The steam plant contains seven boilers, three of which are 20 years old and four 11 years old. These boilers are rated at approximately 500 boiler horse-power each and were originally designed to generate steam at a maximum pressure of 200 pounds per square inch gage. They are all equipped with superheaters, economizers, and stokers of the natural-draft overfeed type. The present equipment for supplying draft consists of two stacks 10 feet in diameter—one 200 feet in height serving the three oldest boilers, the other serving four boilers. The latter stack was originally 200 feet high, but is now only 120 feet high.

The auxiliary equipment consisting of condensers, vacuum pumps, air-compressors, generating sets, etc., is in very poor condition—most of it must be either replaced or repaired.

The buildings and grounds must also receive consideration. The roofs of the boiler and engine houses are in a dilapidated condition. The steel galleries in the engine-room pits have deteriorated to such an extent that they are unsafe for use. The roadway from Washington Boulevard to the station has never been improved and much money has been spent in the past in attempting to keep it passable for automobile trucks.

A diagrammatic sketch showing the present arrangement is shown in Fig. 1.

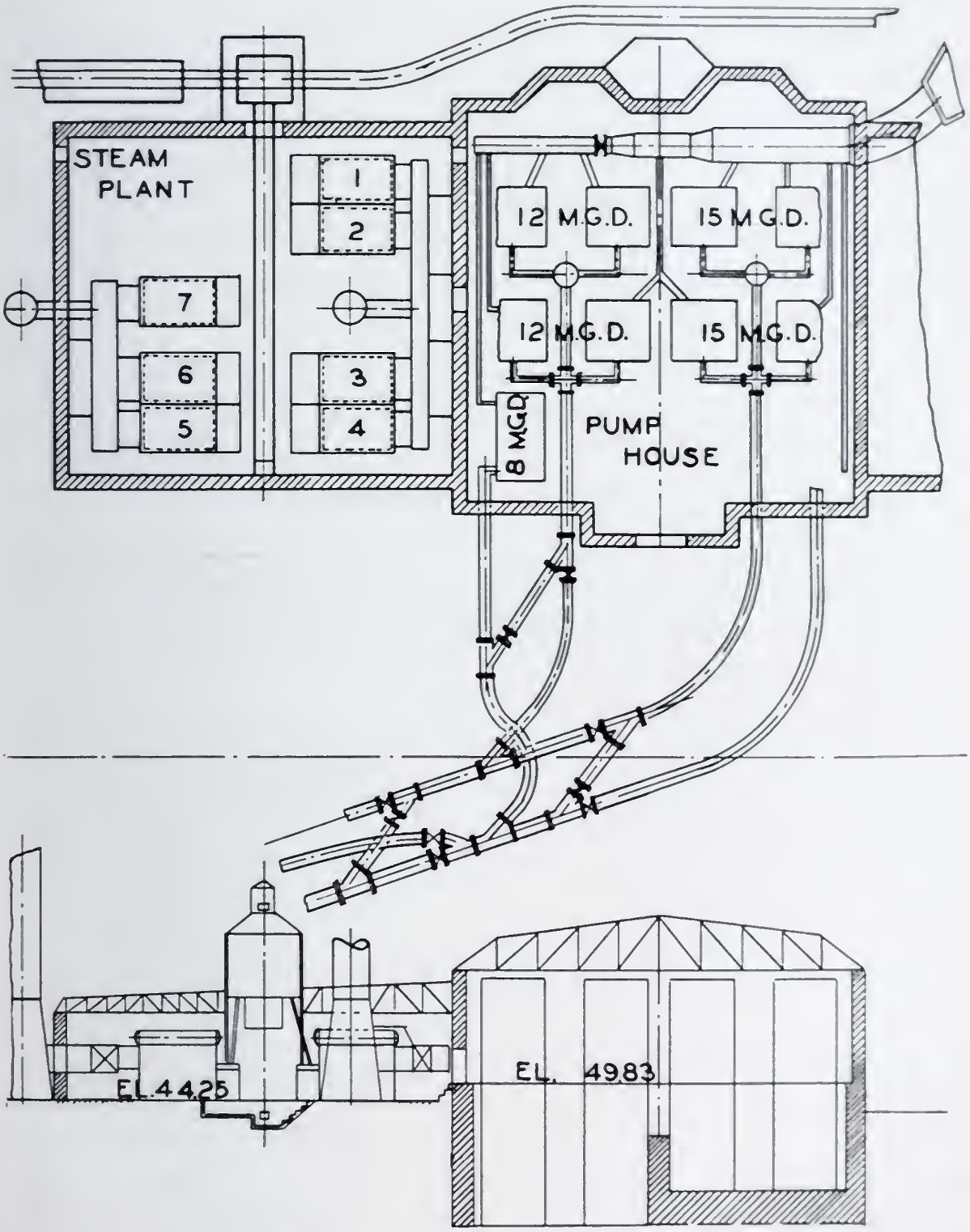

Fig. 1. Present Arrangement.

Present Operating Conditions. A brief outline emphasizing the undesirable operating features is deemed sufficient to justify the expenditures recommended in this study.

The pumps supplying No. 1 reservoir are practically worn out and must be replaced within the near future. One steam main leads from the boilers to the pump engines, a highly dangerous condition.

The condensate from the engines is being thrown away because it contains oil and is, therefore, unfit for use in the boilers.

The boilers are fed with raw water which is treated with compounds within the boiler. This kind of treatment is inadequate and results in the scaling of the internal surfaces of the boilers and in the excessive consumption of oil in the engines, due to the counteracting effects of the impurities in the steam on the lubricating qualities of the oil.

The available draft is insufficient for the successful operation of the stokers. At the present time, the boilers are operating at approximately 95 per cent. of rating, but even at this light load, inspection of the ash indicates an excessive amount of unconsumed carbon.

In view of the foregoing, it is the opinion of this Department that a rehabilitation of this station is necessary, if steam operation is to be continued, and that the present time is a very appropriate one for determining the future policy.

Operating Data of Present Station. For the purpose of obtaining representative data on which to base probable future operating costs, averages over a five-year period (1921-1925) were calculated from the cost records. The results are as follows:

Daily pumpage to No. 1 reservoir	36,189,200 gallons
Daily pumpage to No. 2 reservoir	34,316,100 gallons
Temperature of feed-water to economizers	155 degrees F.
Steam conditions	115 pounds gage and 120 degrees F. superheat
Steam generated per hour	73,133 pounds = 2480 boiler horse-power
Yearly consumption of coal	43,806 tons
Hourly consumption of coal	5 tons = 10,000 pounds
Heating value of coal	13,200 B.t.u.
Boiler and economizer efficiency	63 per cent.
Yearly cost of coal	$143,214
Cost of coal, per ton	$3.27

Annual Operating Costs of Present Station. These figures represent averages over a five-year period (1921-1925) with the excep-

tion of those quoted for "Salaries and wages," which are for the year 1925:

Fuel	$143,214
Salaries and wages	101,959
Repairs and maintenance	43,242
Supplies	11,762
Total	$300,177

Rehabilitation of Existing Station. It is deemed advisable to give here a rather brief outline of what is contemplated as the ultimate pumping system for the steam-operated station, so that the relation of each of the proposed improvements may be considered in its proper relation to the unified general scheme. This general scheme has these two aims:

1. To replace all steam-engine-driven pumps with steam-turbine-driven pumps.
2. To replace the inefficient steam plant with efficient equipment having also low upkeep costs.

The replacement of the engine-driven pumps is not a matter of choice but of absolute necessity, since four of the eight are practically worn out. One 25 m.g.d. pump must be installed in year 1927, and two 20 m.g.d. pumps should be installed in year 1929. These three pumps will replace the four 12 m.g.d. pumps serving No. 1 reservoir. The four 15 m.g.d. pumps serving No. 2 reservoir will probably last not more than ten years, so it is assumed that they will be replaced during the year 1936 with three pumps of approximately 22 m.g.d. capacity each.

Regarding the steam plant, the present stokers are unsatisfactory, but it is the opinion of this Department that their replacement should be deferred until the boilers are replaced. Boilers capable of generating steam at pressures of 300 pounds or over, and at moderately high ratings, should be installed as soon as the present pumps are all replaced by steam-turbine-driven pumps. New stokers for the present boilers would have insufficient coal-burning capacity for the proposed future boilers, and would, therefore, be obsolete in about ten years. In view of this, an attempt should be made to operate the existing steam plant with as few major replacements as possible until a new

steam plant is erected. Rehabilitation will be planned, in this study, with this idea in mind.

Proposed Improvements During Year 1927. Install one 25 m.g.d. turbine-driven pump with all necessary auxiliaries. This installation will necessitate (1) raising the steam pressure at the boilers to 200 pounds gage, (2) a new steam line from the steam plant to the turbine with a reducing-valve and desuperheater beyond the turbine, for furnishing low-pressure and low-temperature steam to the engines.

Rebuild the condensers of four 15 m.g.d. pumping-engines and replace some of the auxiliary equipment, namely, two vacuum pumps and two air-compressors.

The two generating sets that furnish electricity for lighting the station are worn out and must be replaced.

For the improvement of feed-water conditions, provision must be made for the removal of oil from the condensate and for conditioning the make-up water.

The boilers are to be provided with new settings, furnace arches, feed-water regulators, induced-draft fans, soot blowers and automatic combustion control.

Building repairs will consist mainly of a new roof for the pump house, new steel galleries in the pump pits and partial replacement of the boiler house roof.

Improvements outside of the station proper will be limited, in this study, to repairs to valve vaults and necessary valve replacements and a concrete roadway from Washington Boulevard to the station.

A diagrammatic sketch showing the location of the proposed turbine-driven pump, as well as some of the other new equipment, is shown in Fig. 2.

First Cost of and Fixed Charges on Equipment Installed in Year 1927. The first cost denoted in the following table is the total cost including engineering and erection.

Those items with expected life indicated as 10 years cover equipment or improvements which are necessary at this time, but which will be obsolete in 1937, when all the present pumps and boilers are replaced.

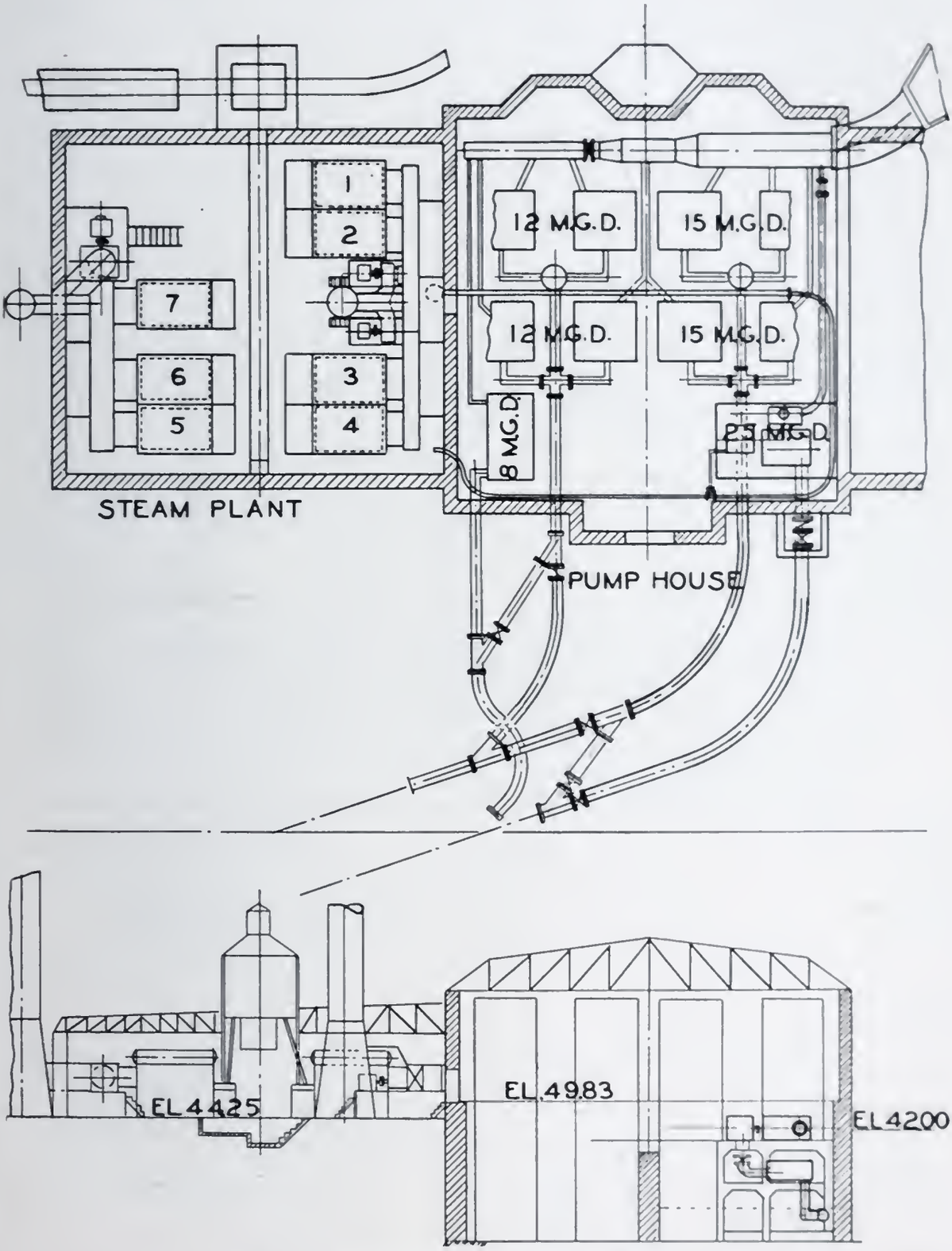

Fig. 2. Proposed Arrangement for 1927.

Items	First cost	Expected life in years	Per cent. fixed charges	Fixed charges
One 25 m.g.d. turbine-driven pump and auxiliaries, steam piping, fittings	$125,000	20	7.36	$ 9,200
Reducing-valves and desuperheater, and new steam line	25,000	10	12.33	3,085
Rebuilding condensers	7,500	10	12.33	925
Two vacuum pumps	3,500	10	12.33	430
Two air-compressors	4,000	20	7.36	295
Two generating sets	6,000	20	7.36	440
Oil-removal apparatus	12,500	10	12.33	1,545
Feed-water treatment	7,500	20	7.36	550
Boiler settings and furnace arches	39,800	10	12.33	4,920
Feed-water regulators	2,000	10	12.33	245
Induced-draft fans	20,000	10	12.33	2,465
Soot blowers	8,000	10	12.33	985
Automatic combustion control	6,000	15	8.99	540
Building repairs	35,000	20	7.36	2,570
Repairs to valve vaults and valve replacements	20,000	40	5.05	1,010
Concrete roadway	16,000	20	7.36	1,175
Total	$337,800			$30,380

Annual Operating Costs for Year 1928. Due to the installation of new equipment in 1927, it is to be expected that certain savings will be effected. The installation of a 25 m.g.d. pump will permit the shut-down of two 12 m.g.d. pumps and will, no doubt, be instrumental in reducing the cost of repairs, maintenance, and supplies.

The operating costs listed herein are based upon the following assumptions:

1. A saving in fuel based upon calculations contained in Appendix A, at the end of this paper.
2. Salaries and wages to be the same as in 1925.
3. A saving of 10 per cent. in repairs and maintenance.
4. A saving of 10 per cent. in cost of supplies.

OPERATING COSTS

Fuel	$123,143
Salaries and wages	101,959
Repairs and maintenance	38,918
Supplies	10,586
Total	$274,606

Proposed Improvements During Year 1929. These improvements will be limited to the installation of two 20 m.g.d. turbine-driven pumps with all necessary auxiliaries. These pumps in conjunction with the proposed 25 m.g.d. pump (to be installed in 1927) should prove sufficient to serve No. 1 reservoir, and will, therefore, permit the removal of the four 12 m.g.d. pumps.

Fig. 3 shows the proposed location of these pumps.

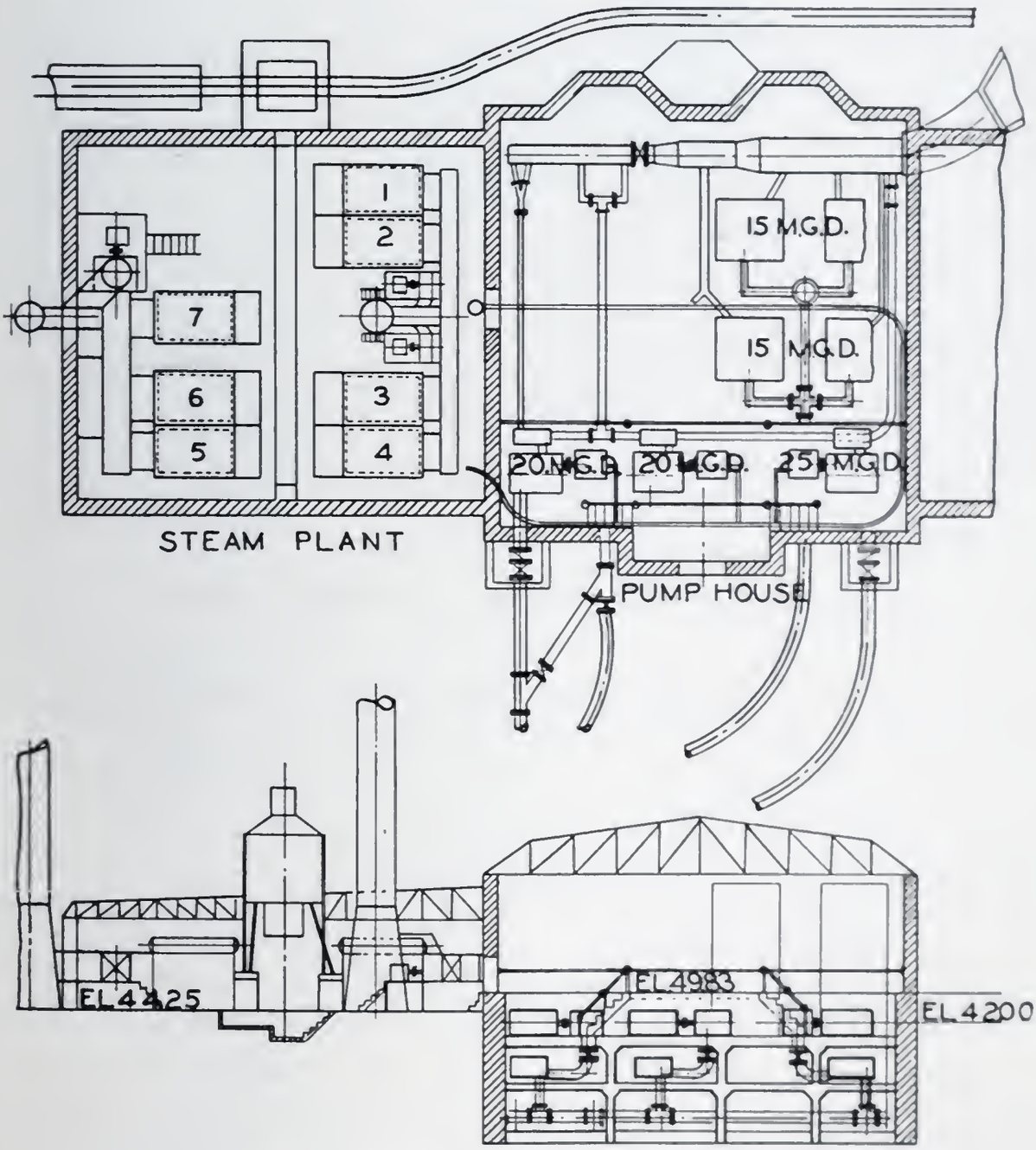

Fig. 3. Proposed Arrangement for 1929.

First Cost of and Fixed Charges on Equipment Installed in Year 1929. The first cost denoted below is the estimated total cost

of the pumps including all auxiliaries, clearing of site, foundations and new floor, suction and discharge mains, and erection of all new equipment:

Item	First cost	Expected life in years	Per cent. fixed charges	Fixed charges
Two 20 m.g.d. turbo-pumps erected and ready for operation	$206,000	20	7.36	$15,162

Annual Operating Costs for Year 1930. The installation of one 25 m.g.d. pump in 1927 would require the operation of only one of the existing 12 m.g.d. pumps the greater part of the time, since the average daily pumpage to No. 1 reservoir is but slightly over 36,000,000 gallons. Therefore, the installation of two new pumps in 1929 will, theoretically, replace only one old pump. The saving in cost of repairs and maintenance that might result from the shut-down of this pump may be greatly offset by the increasing cost of repairs and maintenance on the 15 m.g.d. pumps. In view of this, it is proposed, in this study, to limit the saving in "Repairs and maintenance" and in "Supplies" to five per cent.

The operating costs listed herein are based upon the following assumptions:

1. A saving in fuel based upon calculations contained in Appendix B.
2. A saving in salaries and wages, due to elimination of one oiler job per shift, at $6460 per annum.
3. A saving of five per cent. in repairs and maintenance.
4. A saving of five per cent. in cost of supplies.

OPERATING COSTS

Fuel	$118,973
Salaries and wages	95,499
Repairs and maintenance	36,972
Supplies	10,057
Total	$261,501

Proposed Improvements During Year 1936. Rehabilitation of the existing station should be completed in 1936, or sooner. Two of the 15 m.g.d. pumps will have been in service 32 years and the other two about 29 years. It is proposed, therefore, to install three 22 m.g.d. turbine-driven pumps to replace them.

Regarding the steam-generating equipment, the question is whether to replace only the boilers and accessories that have outlived their useful life or to abandon the existing steam plant and erect an entire new plant equipped with boilers capable of generating steam at 325 pounds gage pressure and at high ratings, with forced-draft stokers or powdered-fuel-burning apparatus and all necessary auxiliary equipment of the most modern type.

Due to the replacement of all the engine-driven pumps, the total output of the steam plant will have been reduced to such an extent that four boilers in operation (five are used at the present time) will be ample to take care of the normal load. Of the seven existing boilers, three will be 30 years old (in 1936) and will have to be scrapped; the other four will probably have eight or nine years more of useful life. Two new boilers, each having a rated capacity of 500 horse-power, with all necessary auxiliary equipment, would be sufficient to rehabilitate the existing steam plant. Fulfilment of this program would, of course, be much cheaper in first cost than the erection of a new steam plant. This advantage, however, is entirely offset by the undesirable features pertaining to the existing plant and enumerated as follows:

1. The existing building is unsuitable for housing boilers set in modern style, mainly because it has insufficient height.
2. The present ash-disposal system requires the employment of three ashmen per shift. (A new plant would require one only.)
3. Due to the limited ratings at which the existing boilers can operate successfully, four boilers must be kept in operation and two firemen must be in attendance at all times. (A new plant could deliver the necessary amount of steam required with two boilers in operation and with one fireman per shift.)
4. The limiting steam pressure will be 200 pounds per square inch gage, or less, as long as the plant contains any of the existing boilers. This pressure is too low for economical operation of turbine-driven pumps.

In view of the foregoing and of the savings indicated by the results of calculations contained in Appendix C, it is proposed to erect

a new boiler house and install efficient steam-generating equipment having also low upkeep costs.

The diagrammatic sketch in Fig. 4 shows the proposed location of the new steam plant and new 22 m.g.d. turbine-driven pumps,

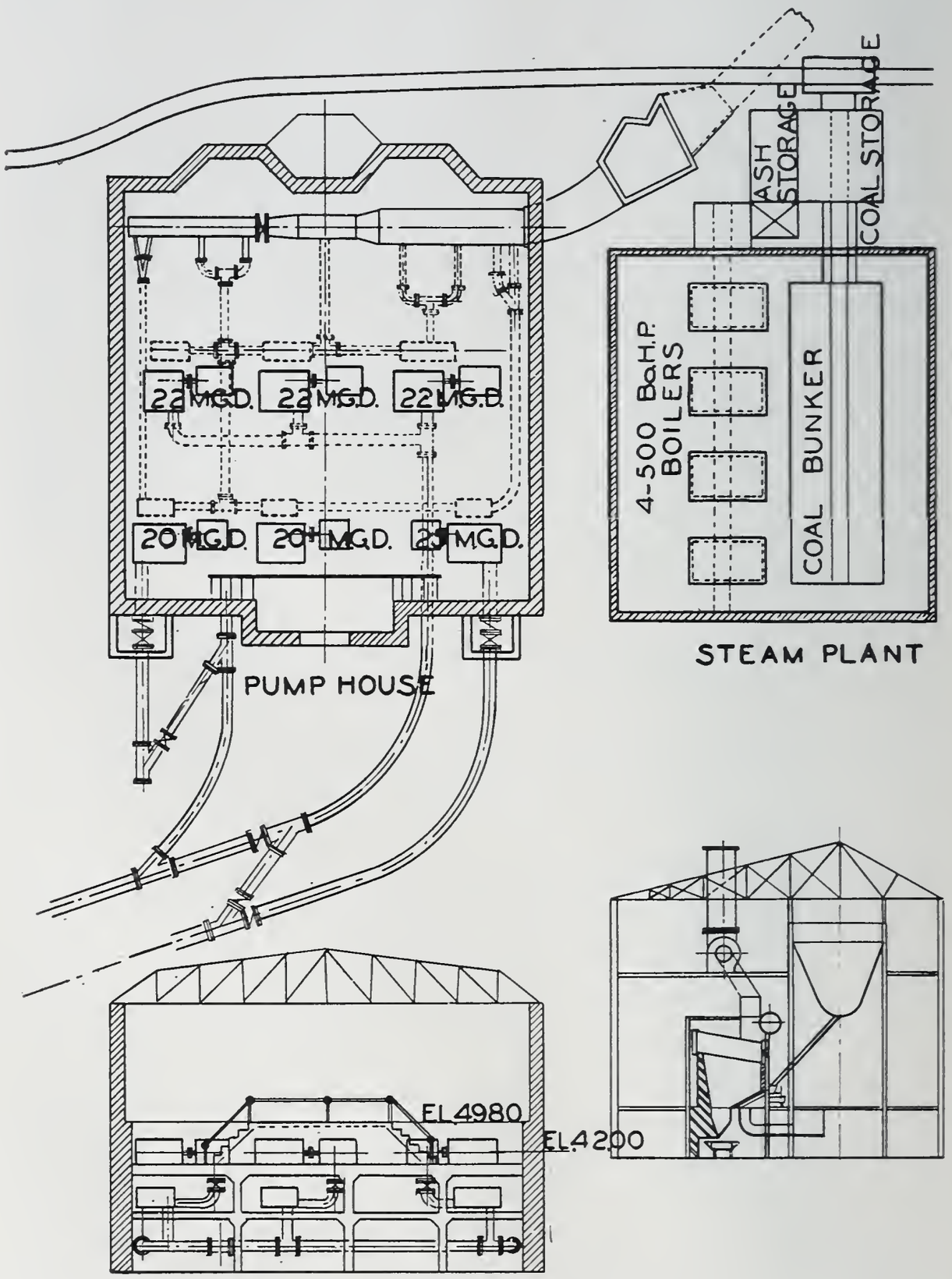

Fig. 4. Proposed Final Arrangement.

and also indicates the general arrangement of the station after rehabilitation.

First Cost of and Fixed Charges on Equipment Installed in Year 1936. Pursuant with the policy adopted in the foregoing, the fixed charges on the turbine-driven pumps, including auxiliaries, steam and water piping, etc., are based upon a useful life of 20 years.

In regard to the new steam plant, 20 years is too short a time on which to base fixed charges. Most of the auxiliary equipment such as coal conveyors, forced- and induced-draft fans, turbine-driven feed-water pumps, etc., may last only 20 years; but the boilers proper should last about 30 years, and the building at least 50 years. Fixed charges based upon an average useful life of 30 years for the entire new steam plant should prove conservative and comparable with those assumed for the centrifugal pumps.

Items	First cost	Expected life in years	Per cent. fixed charges	Fixed charges
Three 22 m.g.d turbine-driven pumps and auxiliaries, steam and water piping, complete	$300,000	20	7.36	$22,080
New steam plant including building, boilers, apparatus for coal and ash handling, and all necessary auxiliary equipment	250,000	30	5.78	14,450
Total.....	$550,000			$36,530

Annual Operating Costs for Year 1937. The operating costs listed herein are based upon the following assumptions:

1. A saving in fuel based upon calculations contained in Appendix D, attached.
2. A saving in salaries and wages, due to the elimination of:

Two oiler jobs per shift.....	$12,920 per annum
One fireman job per shift.....	6,540 per annum
Two ashmen jobs per shift	9,120 per annum
A total saving of	$28,580 per annum

3. A saving of 15 per cent. in repairs and maintenance.
4. A saving of 10 per cent. in cost of supplies.

OPERATING COSTS

Fuel	$ 88,893
Salaries and wages	66,919
Repairs and maintenance	31,427
Supplies	9,052
Total	$196,291

Future Annual Costs of Existing Station, Assuming Rehabilitation to Be Completed in Year 1936. A chart shown in Fig. 5 gives the operating costs and fixed charges on new equipment. The averages indicated on this chart are for a period of 20 years, 1928-1947.

Most Economical Program for Rehabilitation of Existing Steam-Operated Station. As stated in the opening paragraph, the object of this study is to determine which will prove the more economical, a steam-operated station or an electrically operated station. In order to make this comparison, it was deemed necessary to adopt a definite program for the rehabilitation of the existing station, bearing in mind the amount of money available at the present time. The program outlined in the foregoing is based upon proposed renewals at certain specific dates when such renewals would be absolutely necessary for the successful operation of the station. Economy was disregarded.

Analysis of the future annual costs shown in Fig. 5 indicates that, while the operating cost is reduced due to each of the proposed sets of improvements, there is an actual increase in the total "annual cost" due to fixed charges on the cost of these improvements until the final set of improvements has been effected, after which there is a marked reduction in "annual costs." While this analysis is correct, it is misleading in a way because this reduction in "annual costs" could never be realized had not the previous improvements been effected. In other words, the earlier improvements, while responsible for certain savings in operating costs, still retain potential savings which can not be realized until rehabilitation is completed. This all comes about from the change in operating conditions resulting from the installation of a new steam plant. For instance, the duty of the turbine-driven pumps, to be installed in 1927 and 1929, is increased by approximately 20,000,000 foot-pounds per 1000 pounds of steam when the new steam plant is put into operation. Evidently, then, the replacement of the existing steam plant is as important as the replace-

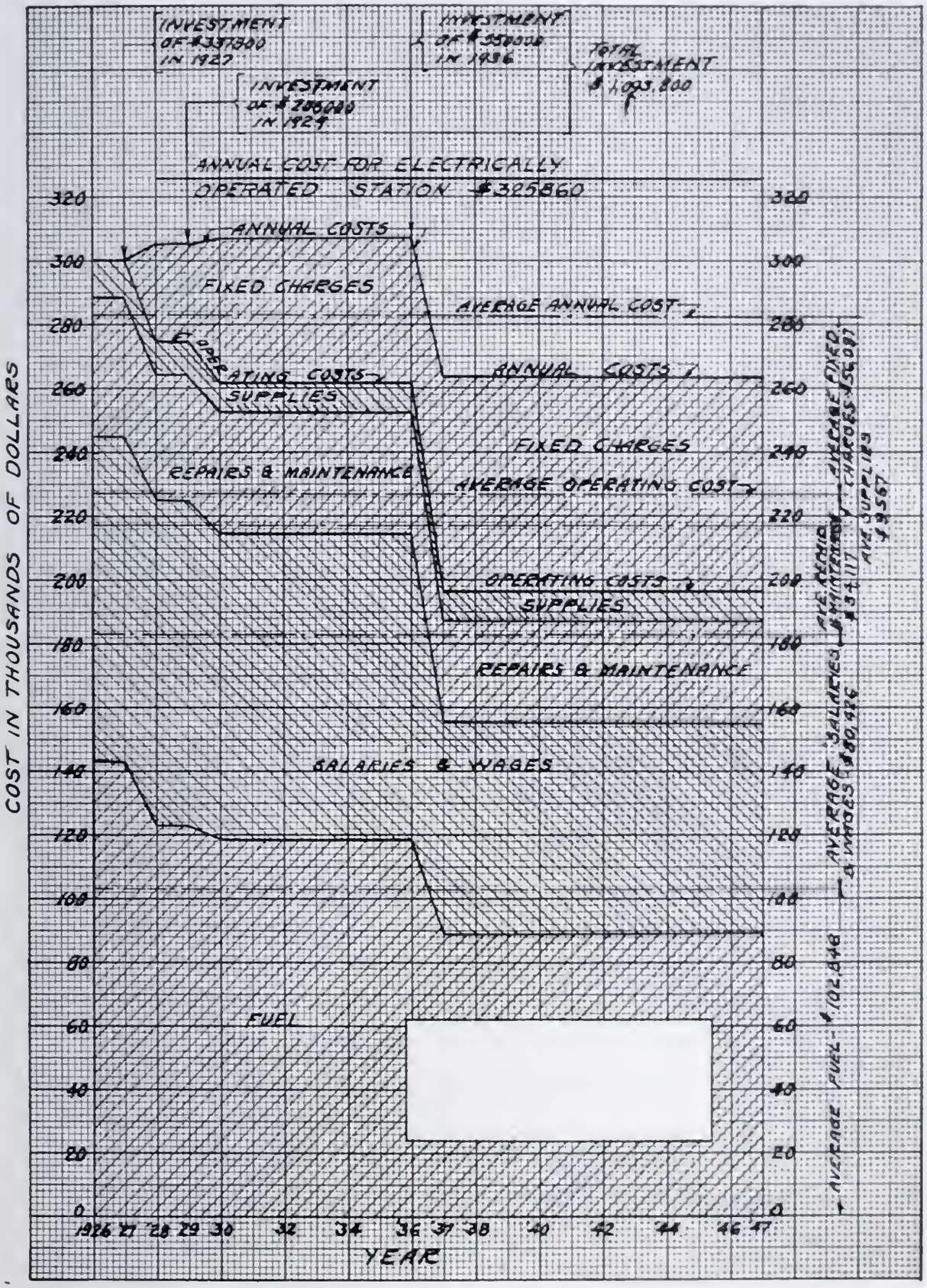

Fig. 5. Estimated Annual Costs, Assuming Rehabilitation Completed in 1936.

ment of the existing pumps, and the reduction in "annual costs" is dependent upon both. Furthermore, since no reduction in "annual costs" can be realized until completion of rehabilitation, the most economical program to be pursued for effecting these replacements is the one which provides for the completion of rehabilitation at the earliest possible date.

This, of course, can not be achieved with the money available for improvements. Therefore, a modification of the most economical program, one which seems feasible and worth consideration, is outlined below.

Modification of Most Economical Program for Rehabilitation of Existing Steam-Operated Station. The first program outlined in the foregoing provides for rehabilitation in three stages—one set of improvements to be effected in 1927, another in 1929, and the final one in 1936. The program proposed herein provides for rehabilitation in two stages—the first set of improvements to be effected in 1927, and the second in 1929.

PROPOSED IMPROVEMENTS DURING YEAR 1927

It is proposed to combine the first two stages of the first program with the exception of certain improvements which are not necessary if rehabilitation is to be completed in 1929.

Install three 22 m.g.d. turbine-driven pumps with all necessary auxiliaries to replace the four 12 m.g.d. pumps now serving No. 1 reservoir. This will necessitate the installation of a new steam line from the existing steam plant which should be designed to withstand a pressure of 325 pounds gage and high superheat, since a portion of it will fit in with the proposed final system. A desuperheater and reducing-valves will have to be provided for furnishing low-temperature and low-pressure steam to the 15 m.g.d. pump engines.

Install two generating sets to replace the existing sets which are practically worn out.

The only improvement recommended for the existing steam plant, in this program, is the installation of one induced-draft fan for the boilers that are dependent for draft upon the short stack.

Repairs to pump building and valve vaults, valve replacements, and a new concrete roadway are included in this program.

All other improvements previously recommended are unnecessary if the existing steam plant and 15 m.g.d. pumps are to be replaced in 1929.

FIRST COST OF AND FIXED CHARGES ON EQUIPMENT INSTALLED IN YEAR 1927

Items	First cost	Expected life in years	Per cent. fixed charges	Fixed charges
Three 22 m.g.d. turbine-driven pumps and auxiliaries, steam and water piping, complete	$325,000	20	7.36	$23,920
High-pressure steam line	20,000	20	7.36	1,472
Desuperheater and reducing-valves	5,000	2	49.02	2,451
Two generating sets	6,000	20	7.36	440
One induced-draft fan	5,000	2	49.02	2,451
Building repairs	35,000	20	7.36	2,570
Valve replacements and repairs to valve vaults	20,000	40	5.05	1,010
Concrete roadway	16,000	20	7.36	1,175
Total	$432,000			$35,489

Annual Operating Costs for Year 1928. These are the same as those indicated on page 56, with the exception of the cost of fuel, which is higher here because no increase in boiler efficiency is anticipated.

Fuel	$125,000
Salaries and wages	95,499
Repairs and maintenance	36,972
Supplies	10,057
Total	$267,528

Proposed Improvements During Year 1929. Install three 22 m.g.d. turbine-driven pumps with all necessary auxiliaries to replace the 15 m.g.d. pumps now serving No. 2 reservoir.

Erect a new boiler house and install efficient steam-generating equipment capable of furnishing steam at a minimum pressure of 300 pounds gage with at least 150 degrees F. of superheat at the turbines.

First Cost of and Fixed Charges on Equipment Installed in Year 1929. These are essentially the same as those shown on page 59, and will not be repeated here.

Annual Operating Costs for Year 1930. Inasmuch as these are based upon the conditions that will prevail after rehabilitation, they are bound to be identical with the final operating costs contained within the first program as indicated on page 60.

Comparison of the Two Schemes Proposed for the Rehabilitation of the Existing Steam-Operated Station. A chart has been prepared which shows the operating costs and fixed charges on new equipment, assuming rehabilitation to be completed in year 1929. The averages indicated on this chart shown in Fig. 6 are for a period of 20 years, 1928-1947.

Comparison of the two schemes reveals three important advantages in favor of completion of rehabilitation in 1929, which can be enumerated as follows:

1. A saving in capital expenditure of $111,800.
2. An average saving in "annual cost" of approximately $16,000 over a period of 20 years.
3. Absolute reliability of operation procured seven years sooner.

The last item is of vital importance and is worthy of careful consideration. The first program assumed that the 15 m.g.d. pumps would last until 1936. They may and they may not. It can be stated, without exaggeration, that the successful operation of the station is in jeopardy as long as it is dependent upon any of the existing engine-driven pumps. From analysis of the annual costs, it is indicated that it will cost the City of Pittsburgh approximately $44,000 annually for each year that the 15 m.g.d. pumps are kept in operation after 1929. This figure does not include costs for extraordinary repairs.

Comparison of Steam and Electrically Operated Stations. Estimates of erection and operating costs were compiled for a new electrically operated station of approximately the same pumpage capacity as the steam-operated station proposed in the foregoing. The detailed calculations have been purposely omitted, since they involve unit power costs which can not be divulged at the present time as negotiations are still pending.

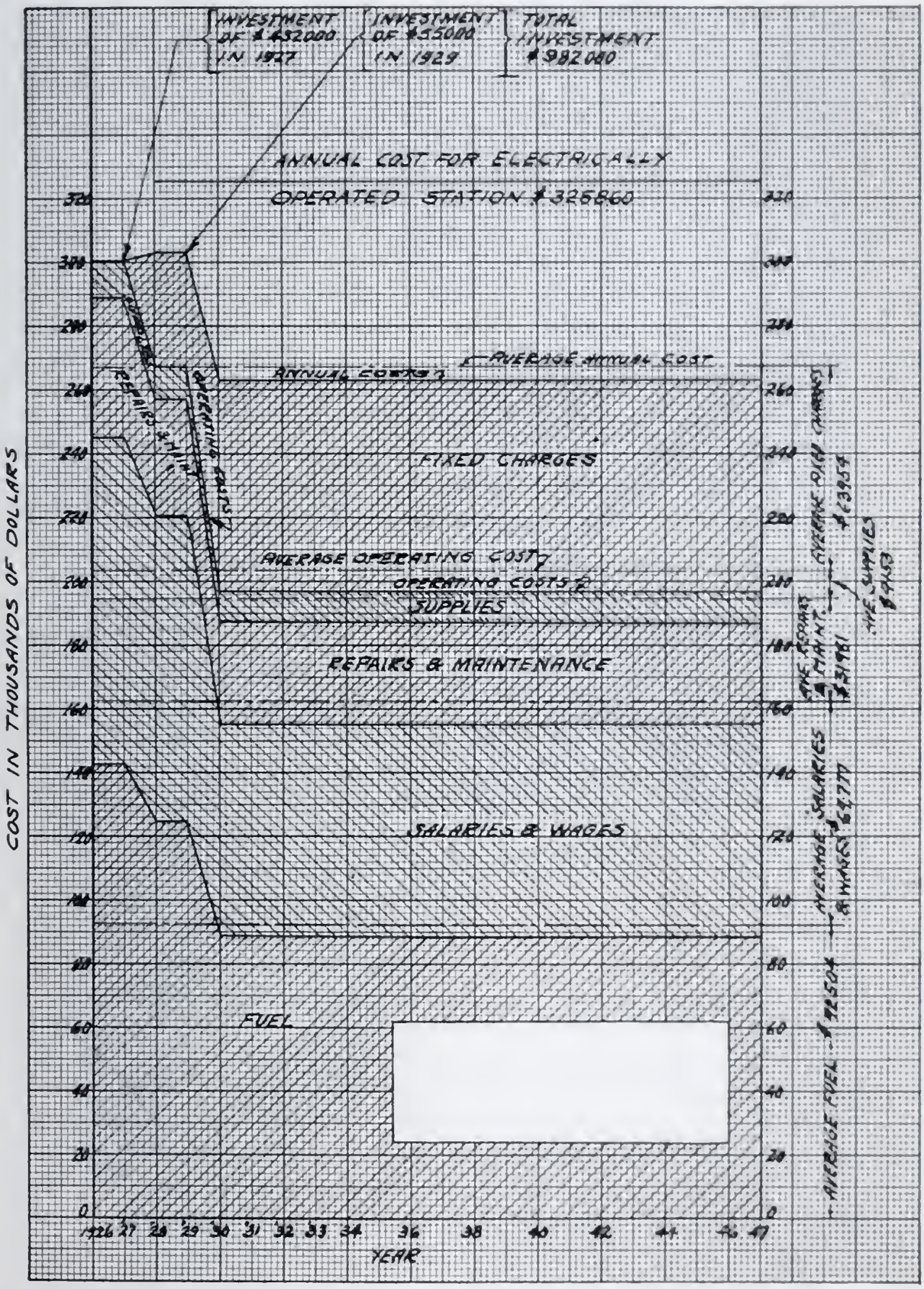

Fig. 6. Estimated Annual Costs, Assuming Rehabilitation Completed in 1929.

The results obtained, however, are shown graphically in Fig. 7, together with the average annual costs of the steam-operated station, for comparison.

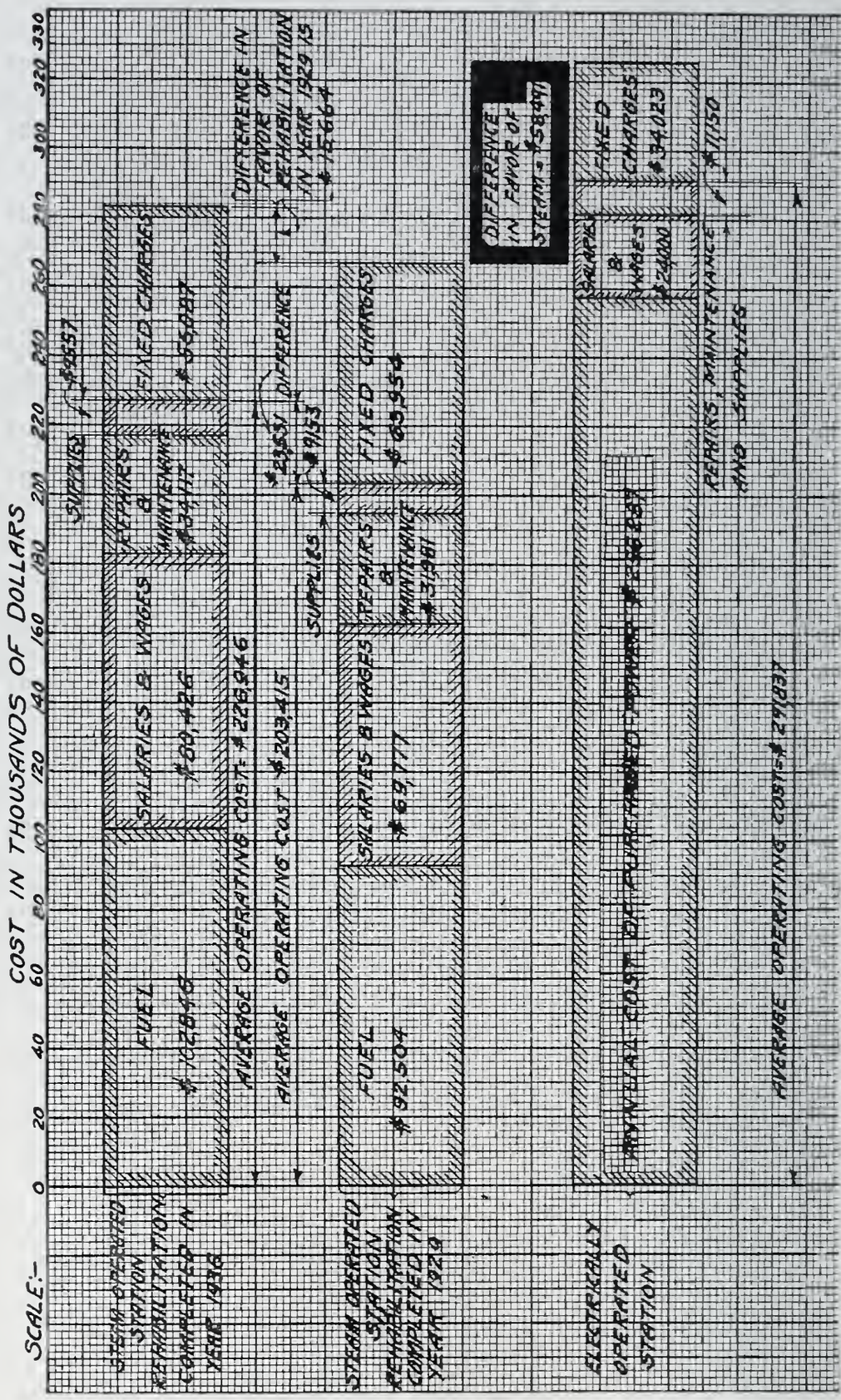

Fig. 7. Comparison of Costs for Steam-Operated and Electrically Operated Station.

Conclusion. In concluding, I wish to emphasize the fact that, even though a study pertaining to this particular station has been completed, no definite policy has yet been decided upon.

The Mechanical Division of the Bureau of Water has available approximately $1,750,000 to spend for improvements. This study indicates that an expenditure of approximately $1,000,000 is necessary to effect complete rehabilitation of Brilliant station alone if steam operation is to be continued. In addition to this, it is proposed to expend nearly $200,000 for a new rising main from this station to No. 2 Highland reservoir, making a total of approximately $1,200,000 that could legitimately be expended on this station.

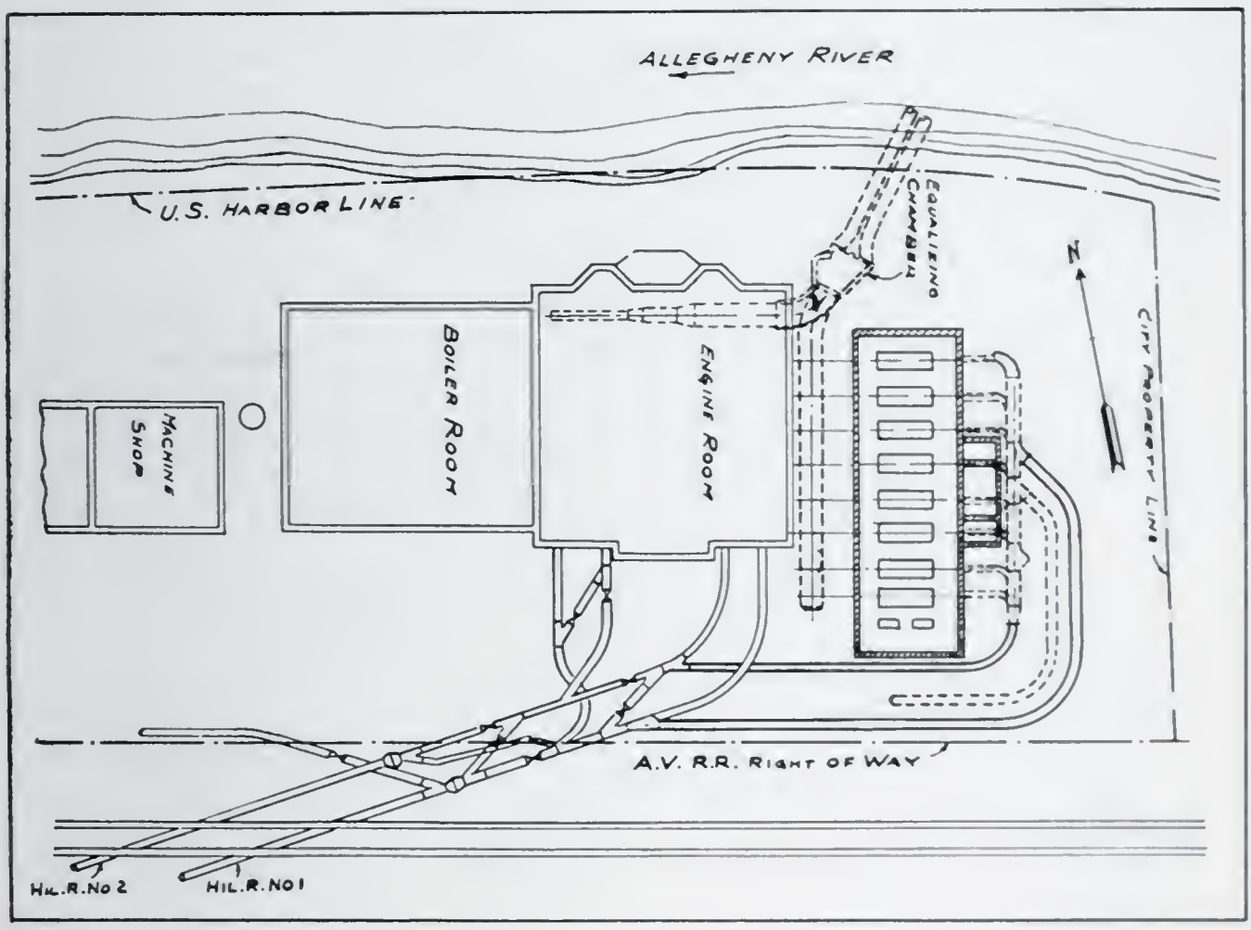

Fig. 8. Proposed Location of Station for Electrically Operated Plant.

Ross and Aspinwall stations need approximately $500,000, so that the total amount of money available is just about sufficient to revamp the three main pumping stations. But Howard Street station needs approximately $150,000. Electrical energy has already been contracted for and requests for bids have been advertised for motor-driven pumps. Herron Hill station needs a little over $100,000 and Mission station nearly $200,000, so that nearly $500,000 is required for the booster stations.

It is, therefore, necessary that studies be made for each station. Studies of Ross and Aspinwall stations along the lines of the one presented this evening are under way and near completion, so that within the near future apportionment of the total funds available can be made. This is not going to be an easy task, however, since the funds available are insufficient to permit complete rehabilitation of all stations.

If in presenting this paper I have shown satisfactory evidence to prove that the City's engineering department is making an earnest endeavor to secure for the people a pumping station system which at moderate cost can favorably compare with similar industrial enterprises, then my object has been accomplished.

APPENDIX A. CALCULATIONS FOR DETERMINING SAVINGS IN FUEL DUE TO NEW EQUIPMENT TO BE INSTALLED DURING YEAR 1927

STEAM REQUIREMENTS FOR EXISTING AUXILIARIES

The steam used by the engines driving the direct-current generators, air-compressors and boiler feed pumps is returned to the feed-water heater and, therefore, can be calculated as follows:

Temperature of water leaving heater = 155 degrees F.
Temperature of water entering heater = 60 degrees F.
Heat absorbed per pound of water = 155 — 60 = 95 B.t.u.
Water evaporated per hour = 73,133 pounds.
Available heat in one pound of exhaust = approximately 1000 B.t.u.
Total available heat in exhaust = 95 × 73,133 = 6,950,000 B.t.u.

$$\text{Total steam returned to heater} = \frac{6{,}950{,}000}{1000} = 6950 \text{ pounds.}$$

Additional steam requirements for auxiliaries are approximated as follows:

	Pounds per hour
Stoker engines and pulsometers	1900
Cleaning boiler tubes and blow-downs	120
Heating	180
	2200

Total steam for auxiliaries = 6950 + 2200 pounds = 9150 pounds per hour.

$$\frac{\text{Steam required for auxiliaries}}{\text{Total steam generated}} = \frac{9150}{73{,}133} = 0.125 = 12.5 \text{ per cent.}$$

Allowing for miscellaneous, assume 13 per cent.

PERFORMANCE OF EXISTING PUMPS

In order to calculate the savings that will accrue from the operation of new turbine-driven pumps, it is necessary that the duty of the existing pumps be determined as closely as possible.

	Gallons
Average daily pumpage to No. 1 reservoir	36,189,200
Average daily pumpage to No. 2 reservoir	34,316,100
Average hourly pumpage to No. 1 reservoir	1,510,000
Average hourly pumpage to No. 2 reservoir	1,430,000

Useful work required for No. 1 reservoir =

$$\frac{1{,}510{,}000 \times 340 \times 25}{60 \times 3} = 71{,}500{,}000 \text{ foot-pounds per minute.}$$

Useful work required for No. 2 reservoir =

$$\frac{1{,}430{,}000 \times 275 \times 25}{60 \times 3} = 54{,}500{,}000 \text{ foot-pounds per minute.}$$

Useful work for both reservoirs = 126,000,000 foot-pounds per minute.

Steam generated hourly ..... = 73,133 pounds.
Steam used for auxiliaries = 73,133 × 0.13 = 9,500 pounds.

Steam available for pumps..... = 63,633 pounds per hour.
Steam available for pumps..... = 1,060 pounds per minute.

Average duty of pumps =

$$\frac{126{,}000{,}000}{1.06} = 119{,}000{,}000 \text{ foot-pounds per 1000 pounds of steam.}$$

It is reasonable to expect that the duty of the 15 m.g.d. pumps is better than that of the 12 m.g.d. pumps, since the latter are practically worn out. Therefore the following duties will be assumed:

Duty of 15 m.g.d. pumps = 121,000,000 foot-pounds per 1000 pounds of steam.
Duty of 12 m.g.d. pumps = 117,000,000 foot-pounds per 1000 pounds of steam.

SAVING IN STEAM DUE TO INSTALLATION OF ONE 25 M.G.D. TURBINE-DRIVEN PUMP

At the present time steam is generated at a pressure of 115 pounds gage and a superheat of 120 degrees F. The steam conditions at the pumps are approximately 90 pounds gage and 100 degrees F. superheat. It is assumed that the new units will be designed to operate with steam at pressures approximating 300 pounds gage and at a superheat of not less than 150 degrees F. However, until a new steam plant is erected, it will be necessary to operate the new units with steam at approximately 185 pounds gage and 100 degrees F.

superheat since the limiting operating pressure of the existing boilers is 200 pounds gage.

Information obtained from reliable pump manufacturers indicates that the guaranteed duty of a 25 m.g.d. turbine-driven pump is not less than 165,000,000 foot-pounds per 1000 pounds of steam at 185 pounds gage and 100 degrees F. superheat.

Useful work required to pump 25,000,000 gallons per day =

$$\frac{25{,}000{,}000 \times 340 \times 25}{24 \times 3} = 2{,}950{,}000{,}000 \text{ foot-pounds per hour.}$$

Steam required $= \frac{2{,}950{,}000{,}000}{165{,}000}$ = approximately 18,000 pounds per hour.

Total heat in one pound of steam at 200 pounds gage and 120 degrees F. superheat ..... = 1269 B.t.u.
Heat in feed-water above 32 degrees F. = 155 — 32..... = 123 B.t.u.

Heat absorbed in boiler and economizer per pound of steam = 1146 B.t.u.

Total heat required from fuel = 1146 × 18,000 = 20,600,000 B.t.u. per hour.
Steam required for the existing 12 m.g.d. pumps to pump 25 m.g.d. =

$$\frac{2{,}950{,}000{,}000}{117{,}000} = 25{,}200 \text{ pounds per hour.}$$

Total heat in one pound of steam at 115 pounds gage and 120 degrees F. superheat ..... = 1256 B.t.u.
Heat in feed-water above 32 degrees F. = 155 — 32..... = 123 B.t.u.

Heat absorbed in boiler and economizer per pound of steam = 1133 B.t.u.

Total heat required from fuel = 1133 × 25,200 = 28,600,000 B.t.u. per hour.
Saving = 28,600,000 — 20,600,000 = 8,000,000 B.t.u. per hour.

$$\frac{8{,}000{,}000}{33{,}479} = 238 \text{ boiler horse-power.}$$

This saving is based upon continuous operation. In view of the fact that the new unit will probably be shut down occasionally for inspection and minor repairs, the extra steam required while it is out of service will be based upon a period of 160 hours annually, and deducted from the above figure.

Extra steam required = approximately (25,200 — 18,000) 160 = 1,150,000 pounds per year = 132 pounds per hour = 4.46, say 5 boiler horse-power.

Net saving = 238 — 5 = 233 boiler horse-power.

PROBABLE EFFICIENCY OF STEAM PLANT DUE TO IMPROVED OPERATING CONDITIONS

The installation of induced-draft fans will permit the operation of the boilers at higher and more economical ratings.

The proposed automatic combustion control will automatically synchronize the operation of the induced-draft fans, stoker engines, and boiler dampers to maintain the correct relation between fuel and air supply and to vary the rate of fuel and air supply in accordance with steam demand.

The removal of oil from the condensate and proper treatment of make-up water will prevent excessive scaling of the internal surfaces of the boilers. The external surfaces will be kept clean by soot blowers, the installation of which is also proposed.

With the above additional equipment it is reasonable to expect a slight increase in efficiency. What the efficiency will be, of course, is very hard to predetermine, but some credit should be given to the steam plant due to these improvements, and it is assumed that the efficiency will increase from 63 to 67 per cent.

ADDITIONAL STEAM REQUIRED TO OPERATE PROPOSED INDUCED-DRAFT FANS

	Boiler horse-power
Average output of boilers	2480
Saving due to new 25 m.g.d. pump	233
Steam required (exclusive of that for fans)	= 2247
Assume net consumption for fans	13
Approximate future output	= 2260

$$\text{Coal required} = \frac{2260 \times 33{,}479}{13{,}200 \times 0.67} = 8600 \text{ pounds per hour.}$$

$$\text{Theoretical air} = \frac{13{,}200}{10{,}000} \times 7.5 = 9.93 \text{ pounds.}$$

Actual air (60 per cent. excess) $= 10 \times 1.6 = 16$ pounds per pound of coal.
Pounds of gas per pound of coal = approximately 17.
17 pounds $\times$ 8600 = 146,000 pounds of gas per hour.
Adding about 10 per cent. for leakage, say 160,000 pounds per hour.

$$\text{Cubic feet per minute at 420 degrees F.} = \frac{160{,}000}{0.0475 \times 60} = 56{,}000.$$

Horse-power required $= 0.000158 \times 2$ inches $\times$ 56,000 = 17.7.
Assume fan efficiency of 60 per cent.

$$\text{Brake horse-power} = \frac{17.7}{0.60} = 29.5.$$

Assume water rate of engine = 35 pounds per horse-power.
Steam per hour $= 29.5 \times 35 = 1070$ pounds.

Total heat in one pound of steam (200 pounds gage and 120 degrees F. superheat)	= 1269 B.t.u.
Total heat in one pound of exhaust (above 155 degrees F.)	= 869 B.t.u.
Heat delivered by boiler and economizer per pound of steam	= 400 B.t.u.

Heat delivered per hour $= 400 \times 1070 = 428{,}000$ B.t.u.

Additional steam required $= \frac{428{,}000}{33{,}479} = 12.8$, say 13 boiler horse-power.

SAVINGS IN FUEL

	Boiler horse-power
Average output of boilers	2480
Additional output required for fans	13
Saving due to new 25 m.g.d. pump	233
Future output (2480 + 13) — 233	= 2260

Coal required $= \frac{2260 \times 33{,}479}{13{,}200 \times 0.67} = 8600$ pounds per hour.

$\frac{8600 \times 8760}{2000} = 37{,}668$ tons a year.

Saving in fuel $= 43{,}806 - 37{,}668 = 6138$ tons a year.

Value of saving in fuel $= \$3.27 \times 6138 = \$20{,}071$ a year.

APPENDIX B. CALCULATIONS FOR DETERMINING SAVINGS IN FUEL DUE TO PROPOSED INSTALLATION OF TWO 20 M.G.D. PUMPS IN YEAR 1929

AVERAGE DUTY OF TURBINE-DRIVEN PUMPS

There will be three turbine-driven pumps available to serve No. 1 reservoir—two having a capacity of 20 m.g.d. each and a larger one of 25 m.g.d. capacity. The guaranteed duty of each unit is 165,000,000 foot-pounds per 1000 pounds of steam at 185 pounds gage and 100 degrees F. superheat, when operating at full load. The average daily pumpage to No. 1 reservoir is 36,189,200 gallons. Two pumps, operating at full capacity, will be more than sufficient to take care of this average. It is necessary, then, in calculating the steam requirements that a lower duty than that quoted above be assumed.

It is impossible to predetermine just what combination of pumps will be used, and whether or not the load will be equally distributed between the two units in operation. When one 20 m.g.d. unit is down for repairs, the combined capacity of the two units in operation would be 45 m.g.d. The average daily pumpage is approximately 80 per cent. of this amount. With two 20 m.g.d. units in operation, the average daily pumpage is approximately 90 per cent. of the full-load capacity. In view of this, it seems reasonable to assume, for these calculations, that the pumps will operate at an average capacity of 85 per cent. of full-load capacity. The duty at this load according to

information obtained from pump manufacturers would be approximately 96 per cent. of that obtained at full-load capacity.

The following calculations are based upon an average duty of 158,400,000 foot-pounds per 1000 pounds of steam at 185 pounds gage and 100 degrees F. superheat.

STEAM REQUIREMENTS FOR TURBINE-DRIVEN PUMPS SERVING No. 1 RESERVOIR

Useful work required to pump 36,189,200 gallons a day =

$$\frac{36{,}189{,}200 \times 340 \times 25}{24 \times 3} = 4{,}270{,}000{,}000 \text{ foot-pounds per hour.}$$

$$\text{Steam required} = \frac{4{,}270{,}000{,}000}{158{,}400} = 26{,}960 \text{ pounds per hour.}$$

Total heat in one pound of steam at 200 pounds gage and 120 degrees F. superheat	= 1269 B.t.u.
Heat in feed-water above 32 degrees F. = 155 — 32	= 123 B.t.u.
Heat absorbed in boiler and economizer, per pound of steam	= 1146 B.t.u.

Total heat required from fuel = 1146 × 26,960 = 30,900,000 B.t.u. per hour.

$$\text{Total steam required from boilers} = \frac{30{,}900{,}000}{33{,}479} = 925 \text{ boiler horse-power.}$$

STEAM REQUIREMENTS FOR EXISTING PUMPS SERVING No. 1 RESERVOIR

Duty of 12 m.g.d. pumps = 117,000,000 foot-pounds per 1000 pounds of steam.
Steam required to pump 36,189,200 gallons daily =

$$\frac{4{,}270{,}000{,}000}{117{,}000} = 36{,}500 \text{ pounds per hour.}$$

Total heat in one pound of steam at 115 pounds gage and 120 degrees F. superheat	= 1256 B.t.u.
Heat in feed-water above 32 degrees F. = 155 — 32	= 123 B.t.u.
Heat absorbed in boiler and economizer, per pound of steam	= 1133 B.t.u.

Total heat required from fuel = 1133 × 36,500 = 41,350,000 B.t.u. per hour.

$$\text{Total steam required from boilers} = \frac{41{,}350{,}000}{33{,}479} = 1235 \text{ boiler horse-power.}$$

SAVINGS IN FUEL

	Boiler horse-power
Total steam required from boilers for existing 12 m.g.d. pumps..	= 1235
Total steam required from boilers for three turbine-driven pumps	= 925
Saving due to three turbine-driven pumps	= 310
Net saving due to 25 m.g.d. pump, and previously credited (see Appendix A)	= 233
Saving in steam to be credited to the two 20 m.g.d. pumps	= 77

$$\text{Saving in fuel} = \frac{77 \times 33{,}479}{13{,}200 \times 0.67} = 291 \text{ pounds per hour.}$$

$$\frac{291 \times 8760}{2000} = 1275 \text{ tons a year.}$$

Value of saving in fuel = \$3.27 × 1275 = \$4170 a year.

APPENDIX C. CALCULATIONS FOR DETERMINING THE ADVISABILITY OF THE ERECTION OF A NEW STEAM PLANT DURING YEAR 1936

AVERAGE DUTY OF THE 22 M.G.D. TURBINE-DRIVEN PUMPS

There will be three pumps to serve No. 2 reservoir, each having a capacity of 22 m.g.d. The average daily pumpage is 34,316,100 gallons. Two pumps operating at full capacity will be more than sufficient to take care of this average. For determining the steam requirements, it is assumed that the load will be equally distributed between the two units operating. Each unit then would deliver an average of 17,158,000 gallons daily. This amount is approximately 78 per cent. of the full-load capacity. Information obtained from pump manufacturers indicates that the duty of these pumps when operating at this capacity will be approximately 92 per cent. of that obtainable when operating at full-load capacity.

In view of the foregoing, all calculations for determining steam requirements for the pumps serving No. 2 reservoir will be based upon a duty equivalent to 92 per cent. of that guaranteed for full-load capacity.

STEAM REQUIREMENTS FOR TURBINE-DRIVEN PUMPS SERVING No. 2 RESERVOIR

The guaranteed duty of these units when operating at full-load capacity with steam at 185 pounds gage and 100 degrees F. superheat is 165,000,000 foot-pounds per 1000 pounds of steam. The average duty, therefore, is 0.92 (165,000,000), or 151,800,000 foot-pounds per 1000 pounds of steam.

Useful work required to pump 34,316,100 gallons per day =

$$\frac{34{,}316{,}100 \times 275 \times 25}{24 \times 3} = 3{,}270{,}000{,}000 \text{ foot-pounds per hour.}$$

$$\text{Steam required} = \frac{3{,}270{,}000{,}000}{151{,}800} = 21{,}540 \text{ pounds per hour.}$$

Total heat in one pound of steam at 200 pounds gage and 120 degrees F. superheat	= 1269 B.t.u.
Heat in feed-water, above 32 degrees F. = 155 — 32.....	= 123 B.t.u.
Heat absorbed in boiler and economizer, per pound of steam	= 1146 B.t.u.

Total heat required from fuel = 1146 × 21,540 = 24,700,000 B.t.u. per hour.

Total steam required from boilers = $\frac{24,700,000}{33,479}$ = 738 boiler horse-power.

TOTAL STEAM REQUIREMENTS, ALL PUMPS TURBINE-DRIVEN AND OPERATING WITH STEAM AT 185 POUNDS GAGE AND 100 DEGREES F. SUPERHEAT

	Boiler horse-power
Boiler output required for average daily pumpage to No. 1 reservoir (see Appendix B)	= 925
Boiler output required for average daily pumpage to No. 2 reservoir	= 738
Boiler output required for both reservoirs	= 1663

Assuming that auxiliaries require 15 per cent. of the total steam generated, the total boiler output = $\frac{1663}{1 - 0.15}$ = 1955 boiler horse-power.

TOTAL STEAM REQUIREMENTS, ALL PUMPS TURBINE-DRIVEN AND OPERATING WITH STEAM AT 300 POUNDS GAGE AND 150 DEGREES F. SUPERHEAT

The guaranteed duty of these units when operating at full-load capacity with steam at 300 pounds gage and 150 degrees F. superheat is 185,000,000 foot-pounds per 1000 pounds of steam.

The average duty of the pumps serving No. 1 reservoir should be approximately 96 per cent. of that guaranteed (Appendix B), namely, 177,500,000 foot-pounds per 1000 pounds of steam. For the pumps serving No. 2 reservoir, the corresponding duty will be 0.92 of 185,000,000, or 170,000,000 foot-pounds per 1000 pounds of steam.

Average daily pumpage to No. 1 reservoir = 36,189,200 gallons.
Average daily pumpage to No. 2 reservoir = 34,316,100 gallons.
Useful work required for No. 1 reservoir =

$$\frac{36,189,200 \times 340 \times 25}{24 \times 3} = 4,270,000,000 \text{ foot-pounds per hour.}$$

Useful work required for No. 2 reservoir =

$$\frac{34,316,100 \times 275 \times 25}{24 \times 3} = 3,270,000,000 \text{ foot-pounds per hour.}$$

Steam required for No. 1 reservoir =

$$\frac{4,270,000,000}{177,500} = 24,060 \text{ pounds per hour.}$$

Steam required for No. 2 reservoir =

$$\frac{3,270,000,000}{170,000} = 19,230 \text{ pounds per hour.}$$

Steam required for both reservoirs..... = 43,290 pounds per hour.

Total heat in one pound of steam at 315 pounds gage and 170 degrees F. superheat ..... = 1307 B.t.u.
Heat in feed-water, above 32 degrees F. = 155 — 32..... = 123 B.t.u.

Heat absorbed in boilers, per pound of steam..... = 1184 B.t.u.

Total heat required from fuel = 1184 × 43,290 = 51,250,000 B.t.u. per hour.

Total steam required from boilers = $\frac{51,250,000}{33,479}$ = 1530 boiler horse-power.

Assuming that auxiliaries require 15 per cent. of total steam generated, the total boiler output = $\frac{1530}{1 - 0.15}$ = 1800 boiler horse-power.

CAPACITY AND EFFICIENCY OF PROPOSED NEW STEAM PLANT

The average output of this plant as calculated in the preceding paragraph would be 1800 boiler horse-power. It is proposed to install four boilers, each having a rated capacity of approximately 500 horse-power. The boilers and fuel-burning equipment could be purchased on the basis that they would be capable of operating at a continuous rating of 250 per cent. and at a maximum rating of 300 per cent. for a three-hour period. The normal rating, with two boilers on the line, would be approximately 180 per cent.—a very economical rating. Efficiencies of 80 per cent., or over, should be attainable under the ideal conditions that would prevail; but, for the sake of conservatism, an efficiency of 75 per cent. will be assumed on which to base the fuel cost.

OVERALL EFFICIENCY OF EXISTING STEAM PLANT AFTER REHABILITATION

Calculations previously made for the determination of savings due to the proposed improvements during the year 1927 were based on a combined boiler and economizer efficiency of 67 per cent. After rehabilitation in the year 1936, the steam plant would contain four of the existing boilers and two new boilers. Assuming the efficiency of the new boilers at 75 per cent., the average overall efficiency of this plant would be approximately 70 per cent.

SAVINGS IN FUEL DUE TO OPERATION WITH STEAM AT 300 POUNDS GAGE AND 150 DEGREES F. SUPERHEAT

Fuel required when operating with steam at 185 pounds gage and 100 degrees F. superheat = $\frac{1955 \times 33,479}{13,200 \times 0.70}$ = 7100 pounds per hour.

$\frac{7100 \times 8760}{2000}$ = 31,100 tons a year.

Fuel required when operating with steam at 300 pounds gage and 150 degrees F. superheat $= \frac{1800 \times 33{,}479}{13{,}200 \times 0.75} = 6100$ pounds per hour.

$$\frac{6100 \times 8760}{2000} = 26{,}700 \text{ tons a year.}$$

Saving in fuel = 31,100 — 26,700 = 4400 tons a year.
Value of saving in fuel = \$3.27 × 4400 = \$14,380 a year.

SAVINGS TO BE CREDITED TO NEW STEAM PLANT DUE TO SMALLER FORCE REQUIRED FOR OPERATION

The rehabilitated plant would require four boilers in operation continuously. This condition would necessitate the attendance of one water tender, two firemen, and at least two ashmen per shift.

The new plant with only two boilers in operation continuously would require one water tender, one fireman, and one ashman, and would, therefore, eliminate the services of two men per shift.

The cost in wages per year for three firemen (one per shift) is \$6540, and for three ashmen, \$4560. The annual saving in wages would be \$6540 plus \$4560, or \$11,100.

FIXED CHARGES

The total cost of the two new boilers with stokers and all necessary auxiliary equipment required for the rehabilitation of the existing steam plant would be approximately \$75,000.

The estimated cost of an entire new steam plant is \$250,000. The additional initial investment required for a new plant, therefore, is \$175,000.

The fixed charges on the additional investment based upon an average useful life of the plant of 30 years amount to \$175,000 multiplied by 0.0578, or \$10,115. This amount must be deducted from the savings in fuel and labor to determine the net saving to be credited to the new steam plant.

NET SAVING TO BE REALIZED BY THE ERECTION OF A NEW STEAM PLANT

Saving in fuel	\$14,380
Saving in labor	11,100
Gross saving	\$25,480
Difference in fixed charges	10,115
Net annual saving	\$15,365

This saving is analogous to an annual dividend of 8¾ per cent., and surely warrants the additional expenditure necessary for the erection of a new steam plant.

APPENDIX D. CALCULATIONS FOR DETERMINING SAVINGS IN FUEL DUE TO NEW EQUIPMENT TO BE INSTALLED DURING YEAR 1936

STEAM REQUIREMENTS FOR EXISTING PUMPS SERVING No. 2 RESERVOIR

Duty of 15 m.g.d. pumps = 121,000,000 foot-pounds per 1000 pounds steam.
Average daily pumpage to No. 2 reservoir = 34,316,100 gallons.
Useful work required to pump 34,316,100 gallons a day =

$$\frac{34{,}316{,}100 \times 275 \times 25}{24 \times 3} = 3{,}270{,}000{,}000 \text{ foot-pounds per hour.}$$

$$\text{Steam required} = \frac{3{,}270{,}000{,}000}{121{,}000} = 27{,}000 \text{ pounds per hour.}$$

Total heat in one pound of steam at 115 pounds gage and 120 degrees F. superheat ..... = 1256 B.t.u.
Heat in feed-water, above 32 degrees F. = 155 — 32 ..... = 123 B.t.u.

Heat absorbed in boiler and economizer per pound of steam = 1133 B.t.u.
Total heat required from fuel = 1133 × 27,000 = 30,600,000 B.t.u. per hour.

$$\text{Total steam required from boilers} = \frac{30{,}600{,}000}{33{,}479} = 915 \text{ boiler horse-power.}$$

STEAM REQUIREMENTS FOR TURBINE-DRIVEN PUMPS SERVING No. 1 RESERVOIR

Calculations for the steam requirements of these pumps when using steam at 185 pounds gage and 100 degrees F. superheat are contained in Appendix B, reference to which indicates that the total steam required from boilers is 925 boiler horse-power.

TOTAL STEAM REQUIREMENTS BASED UPON CONDITIONS PREVAILING DURING YEAR 1935

Average boiler output required for the turbine-driven pumps serving No. 1 reservoir, when using steam at 185 pounds gage and 100 degrees F. superheat ..... = 925 boiler horse-power
Average boiler output required for existing pumps serving No. 2 reservoir..... = 915 boiler horse-power

Boiler output required for both reservoirs..... = 1840 boiler horse-power
Assuming that auxiliaries require 15 per cent. of the total steam generated,

$$\text{the total boiler output} = \frac{1840}{1 - 0.15} = 2165 \text{ boiler horse-power.}$$

TOTAL STEAM REQUIREMENTS, ALL PUMPS TURBINE DRIVEN AND OPERATING WITH STEAM AT 300 POUNDS GAGE AND 150 DEGREES F. SUPERHEAT

Calculations contained in Appendix C indicate that the total boiler output = 1800 boiler horse-power.

SAVINGS IN FUEL

Fuel required under conditions prevailing during year 1935 =

$$\frac{2165 \times 33{,}479}{13{,}200 \times 0.67} = 8200 \text{ pounds per hour.}$$

$$\frac{8200 \times 8760}{2000} = 35{,}900 \text{ tons a year.}$$

Fuel required under conditions prevailing after the installation of new equipment $= \frac{1800 \times 33{,}479}{13{,}200 \times 0.75} = 6100$ pounds per hour $= 26{,}700$ tons a year.

Saving in fuel = 35,900 — 26,700 = 9200 tons a year.

Value of saving in fuel = \$3.27 × 9200 = \$30,080 a year.

DISCUSSION

C. A. Carpenter, *Chairman*:* There are a few comments I would like to make before throwing the question open to general discussion. In the first place, the City of Pittsburgh is to be congratulated on having a very competent engineering department. There is no doubt that the affairs of the city are in very able hands.

The paper very clearly brings out the difference in financing between municipal and private work. It is interesting to note that the men interested in this problem are members of our Society.

There is another factor that has appealed to me a little in listening to Mr. Shaw. An engineering analysis is something like a lawyer's brief—it does not represent a decision. The case may be slightly controversial, and people may have different opinions as to how to apply the engineering. It is on this basis that I hope we will have a lot of discussion.

N. B. Jacobs:† In determining the proper capacity of station, and the reasonable size of the units to be installed, has any consideration or weight been given to the possible decrease in the amount of water pumped because of the installation of meters, which may or may not take place in the future; or, is this possible saving entirely offset by the probable increase in use of water, due to growth of population within the district supplied by the city waterworks; or, does the fact that the outlying districts of the city are now supplied to a large degree by privately owned waterworks utilities make it unnecessary to

*Carpenter & Byrne, Pittsburgh.

†Treasurer, Morris Knowles, Inc., Pittsburgh.

consider future growth in determining capacities of units and stations in the City of Pittsburgh?

In making comparisons between privately operated utilities and municipally operated utilities, is it not true that under the present laws in Pennsylvania the $0.004 tax on bonds applies exactly in the same manner to municipal bonds as it does to bonds of privately owned waterworks utilities?

WILLIAM SHAW: For the purpose of comparison, it was assumed that the decrease in the amount of water pumped, because of the installation of meters, would be offset by the increase in use of water due to growth of population. The state tax on bonds does not apply in the same manner to municipal bonds as it does to bonds of privately owned waterworks utilities. I do not know the exact amount of the tax on our bonds, but think that it is approximately $0.0005, or practically one-tenth of that for privately owned utilities. The fixed charges assumed herein are sufficiently large to cover the state tax.

J. F. LABOON:* I have listened with a great deal of interest to Mr. Shaw's analysis of the Brilliant pumping station, which is a worthy contribution to waterworks literature. In connection with his paper, it might prove of interest to know whether the station duties as Mr. Shaw assumes them in the future were based on the guaranteed test efficiencies of the pumps, or whether they were actual operating efficiencies.

Furthermore, the cost per unit of power shown by the curve of electrical cost might be of interest. In connection with Mr. Shaw's study it might be brought out that there is an important factor to be considered in analyses of this kind where you have existing buildings that are capable of housing pumping machinery extensions of the steam type and also of the electric type, and that is the fixed charges on such buildings. Where the existing buildings are adequate to house either steam-pumps or electric pumps, fixed charges may be neglected to the advantage of the steam installation, but where new buildings must be erected, the advantage is with electric pumps because of the more extensive buildings required for steam-pumps and the boiler plant.

*Member, J. N. Chester Engineers, Pittsburgh.

In connection with the installation of centrifugal pumps in a moderate sized station, it is realized by engineers who are interested in this problem, and deal with it daily, that electrical pumps of the size quoted in the paper require full-speed operation for the development of maximum efficiency, and it, therefore, holds good that reservoir storage must be available for such operation. Pittsburgh fortunately has such reservoirs. However, such reservoirs are not always possible or practicable, especially in cities having a flat topography. Therefore, electrical pumping with centrifugal pumps suffers somewhat in comparison by virtue of the reduced operating efficiencies if operating speeds must be reduced below the speed of maximum efficiency in order that the fluctuating demands of the city may be met directly by the pumps.

In connection with this same problem may I spend a minute or two to tell you of the experience of a neighboring city, Wheeling, W. Va. They had a few years ago a steam plant in operation on the shore of the Ohio River in a location very restricted in area, with boilers about thirty years old, furnishing steam at 100 pounds pressure with no superheat—a very antiquated installation. The pumping machinery consisted of two old Holley pumps 35 years old and one Allis-Chalmers vertical, triple-expansion pump, ten or eleven years old. The question of a filtration plant came up, and at the same time the rehabilitation of the waterworks pumping station. The existing site offered no space for the construction of a filtration plant.

The problem was whether to provide for a filtration plant on a site removed two miles up-stream and operate the present high-service pumping station or to combine those two operations in a single location. In the analysis of the problem electric power was considered. The whole installation benefited greatly in this particular instance by virtue of the fact that new buildings had to be constructed, and definite fixed charges could be used on such buildings. The old Allis-Chalmers pump was in such shape that it could be moved. It had a life of fifteen or twenty years more and was worthy of salvage. The station duty of the old station averaged for a period of five years, in contrast with what Mr. Shaw gave for the Brilliant station, 90,000,000 foot-pounds per 1000 pounds of steam with the Allis-Chalmers pump operating about 95 per cent. of the time; it was condensing, of course. In our analysis of the prospective steam plant

we assumed a duty of 110,000,000 foot-pounds per 1000 pounds of steam at 200 pounds pressure and 100 degrees F. superheat. This was an assumed future average operating condition covering the life of the pumps.

The result of this analysis was that electric power suffered somewhat in comparison with steam, the original rate quoted by the power company being about 1.1 cents per kilovolt-ampere for primary current. This, however, later in the negotiation was reduced to 0.86 cent per kilovolt-ampere, which was accepted. Slip-ring motors were installed with a synchronous condenser, giving the station unity power-factor and enabling it to use current on the kilovolt-ampere basis. The fixed charges and operating expenses for a steam plant were about $15,000 a year in excess of what would be experienced with an electric station. Mr. C. H. Dowler, manager at that time, felt that with a reduced operating force as developed in the analysis he could reduce a lot of the political patronage with which he was troubled at times, and he felt that the simplification of the operation justified the acceptance of this loss. Furthermore, certain other needed improvements could be made with the saving in first cost made by adoption of electricity as compared with steam, amounting to $300,000.

In closing, I wish to say to the credit of the city officials of Wheeling that the operating force for the pumping station was reduced from 23 men to seven men upon placing the new electric station in operation.

William Shaw: Information obtained from reliable pump manufacturers indicated that the duty of the proposed turbine-driven units when operated at full load with steam at 300 pounds gage and 150 degrees F. superheat would not be less than 185,000,000 foot-pounds per 1000 pounds of steam.

The average duty of the pumps serving No. 1 reservoir was assumed at 175,500,000 foot-pounds per 1000 pounds of steam, and that of the pumps serving No. 2 reservoir at 170,000,000 foot-pounds per 1000 pounds of steam. A combined pump and motor efficiency of 80 per cent. was assumed over the 20-year period in calculating the cost of electrical energy. In view of the fact that the reservoir storage enables the city to operate the turbine-driven pumps at the

speed of maximum efficiency, I believe that the assumed duties are conservative as compared with the assumed overall efficiency of the motor-driven units.

While the existing pump building is capable of housing the proposed pumping units (steam or electric), considerable expenditure will be necessary to rehabilitate it. The total estimated cost for putting this building in first-class shape is approximately $175,000, and this cost has been charged against steam operation. The corresponding charge against electrical operation for a new building is approximately $155,000.

J. F. Laboon: How about the cost of power?

William Shaw: Regarding the cost per unit of electrical energy, I regret that I can not divulge the basic cost. Negotiations with the public utilities company are still pending. This paper was not presented to prove that steam operation is more economical than electrical operation or *vice versa,* but rather as an example of a special engineering study.

Gilbert S. Walker:* In the diagrams I notice that most of the saving is in the pay-roll. If you continue the present pay-roll there seems to be virtually no saving in any of the diagrams. Will the politicians let you make that cut in the pay-roll?

William Shaw: In the case of electrical operation, it is true that a great saving in wages is anticipated. The present annual cost for labor is approximately $102,000, while the labor cost set up for electrical operation is only $24,000—a reduction of $78,000. This is not quite true, however, if steam operation be continued. The total reduction in operating cost due to the installation of high-pressure boilers and turbine-driven pumps is $96,762 annually. Of this amount $50,710 is saved from fuel, $32,182 from cost of labor, and the balance from repairs, maintenance, and supplies.

If the present pay-roll were to be continued there would still be a saving of $64,580 annually should this station be continued as a steam-operated station. If no reduction in pay-roll be assumed, elec-

*Consulting Engineer, Pittsburgh.

trical operation is out of the question, since the cost of purchased power is far in excess of the present cost of fuel.

P. S. WICKERHAM:* There is one point that came to my mind. It does not really bear on this problem, but I just want to ask if any one else would think of it in the same light. It has never been used heretofore in the analysis of any of the engineering problems in regard to waterworks or municipal affairs. Those of us who attended the International Conference on Bituminous Coal here last year must have been impressed with the things that are going to happen in regard to fuel. While 20 years is not very long to compute the life of a plant, yet when you view it from the possible standpoint of the chemist, 20 years may be a good piece away; that is, there may be certain revolutionary discoveries in the next 20 years which will basically change the cost of our coal. With that in mind, is it not possible that in the future we may want to take that factor into consideration; will that not be in favor of the electrically driven plant rather than the steam-driven plant?

WILLIAM SHAW: Mr. Wickerham asks a very pertinent question, but one hard to answer. The probable future cost of coal is one of the intangible quantities which should be considered, perhaps, in comparing steam operation with electrical operation. Another intangible quantity to be considered, then, is the probable future cost of electrical energy. Should the cost of coal increase, is it not reasonable to suppose that the cost of electrical energy will increase?

P. S. WICKERHAM: Will the price increase to them in the same manner that it would to your municipality, when the municipality can get, for instance, a guaranteed rate of current power for a period of time? Or if a new type of power unit is developed, would not the loss from scrapping an electrically equipped plant be less than similar loss from one steam equipped?

WILLIAM SHAW: I, of course, do not know whether the price increase to them would be the same as to a municipality, but I would like to point out that an increase in the price of coal to us would not

*Consulting Civil Engineer, Butler, Pa.

be so vital as an increase in the price of electrical energy. Of the total annual operating cost for the steam-operated station, 40 per cent. or less is fuel; while in the electrically operated station, practically 90 per cent. of the total annual operating cost is for electrical energy. This brings up another point. Suppose that, due to increased population or annexation, the capacity of this station is increased materially. The increased cost of electrical energy would be two and one-half to three times that of the increased cost of coal. This seems to be worthy of more serious consideration than the probable future unit cost of either coal or electrical energy.

Regarding the guaranteed rate of current for a period of time, if a special rate is granted it is usually based upon a certain price of coal. Any increase due to coal automatically increases the rate of unit power; also, I believe that the Public Service Commission has the power to alter rates at any time.

If a new type of power unit is developed, the loss from scrapping an electrically equipped plant would certainly be less than that involved in scrapping a steam plant. We have to take that chance if we continue with steam operation. However, other municipalities and many industrial concerns are taking the same chance.

E. E. Bankson:* As a matter of passing interest may I inquire as to what consideration was given the matter of plant values in existence at the end of the 20-year period; and does the fact that you are required to set aside a sinking fund have any practical bearing on this question?

William Shaw: There will be plant values at the end of the 20-year period. The steam-operated plant would contain boilers and miscellaneous equipment which would still have several years of useful life. On the other hand, while the electrically driven pumps would practically be worn out, the building would still be in very good shape. The difference in plant values would be practically negligible, however. Also, it was decided that plant values, 20 years hence, should not be considered too seriously, since there is no assurance that either the steam-operated or the electrically operated plant would be at all suitable for future extension. The setting aside of a

*Member, J. N. Chester Engineers, Pittsburgh.

sinking-fund does have a bearing on this question. It involves depreciation charges, and such charges have been taken care of in this study.

J. F. Laboon: I would ask Mr. Shaw to make a statement concerning the sinking-fund. Might we assume that straight-line depreciation in fixed charges is used in view of the previous statement that no sinking-fund is established for the purpose of fixed charges?

William Shaw: The method used for calculating fixed charges in this study does not conform to the method used by the city. I was not aware of this fact, however, until the study had been completed and submitted for consideration. Straight-line depreciation is used, plus an average charge of 2⅛ per cent. to cover the interest on and the marketing of the bonds. The total fixed charges for a 20-year period figured on this basis would amount to 7⅛ per cent. The total fixed charges assumed in this study are slightly greater (7.36 per cent.). The error due to this difference in fixed charges favors electrical operation, but is practically negligible.

MINE LOCOMOTIVES FOR GATHERING AND MAIN-LINE HAULAGE*

By W. A. Clark†

Handling coal from the face to the tipple or shaft bottom in the early stages of mining was done by hand, using small cars. Then animals were introduced to do the hauling. Next, rope haulage was introduced and is still extensively used in the mines in Great Britain. In this country rope haulage has never been used extensively except on slopes. As mines expanded, the use of man or animal haulage did not permit the desired output. Steam locomotives were introduced, and followed by compressed-air, gasoline, and electric locomotives. At the present time, in this country, electric locomotives are almost universally used in mines of any size for main haulage work. A few mines use large conveyors for carrying the coal from the entries to the tipple or shaft bottom, smaller conveyors being used in the entries.

Mules are still used extensively for gathering cars from the mine face to the parting where the cars are picked up by the haulage locomotives, but mules are being replaced by locomotives. Gathering locomotives are of various types—conductor cable-reel locomotives, traction or crab-reel locomotives, storage-battery locomotives, and combination trolley and storage-battery locomotives.

The over-expansion of coal-mines during the World War has reduced the selling price of coal so that it is necessary to cut down the overhead expenses and reduce the operating costs to a minimum. This has led to the introduction of larger cars and larger haulage locomotives to reduce the man power required to get the desired output. The introduction of loading machines and room conveyors favors the use of larger cars. The increase in size increased the weight of gathering locomotives so that eight-ton gathering locomotives are being used to a larger extent than formerly.

The system of mining, and the dip of the coal, determine the type of gathering locomotive which is best adapted to the particular mine. Where the work is concentrated so that the rooms are close together and the hauls on the entries are relatively short, the storage-battery locomotive finds its application, particularly if the coal is nearly level. Under these conditions, if a proper sized battery is used,

*Presented at Mining Conference, October 20, 1927. Received for publication March 6, 1928.

†General Engineer, Westinghouse Electric & Mfg. Co., East Pittsburgh, Pa.

the battery maintenance can be kept low, and, as motor maintenance is low due to the low battery voltage, a battery locomotive may be as economical to operate as a trolley and reel locomotive, considering the maintenance of overhead, bonding, reel and motors.

Where the hauls on the entry are longer, the combination locomotive has its field, particularly where there are grades on the entries. The higher speed on the entry when operating with a trolley permits a greater output than with a straight battery locomotive. The battery maintenance is usually higher on a combination locomotive, particularly when arranged to change the battery when operating from a trolley. The motor maintenance is also slightly higher than on a straight battery locomotive, due to the higher voltage, and the maintenance of trolley and bonding must be considered.

The conductor cable-reel locomotive may be successfully applied in all mines where the grades in the rooms are not too steep. The locomotive has a higher speed on the entry than a battery locomotive and will usually gather more cars than a storage-battery locomotive, the higher speed more than making up for the time required to hook and unhook the cable when entering or leaving the rooms.

Where grades in the rooms are steep, it is frequently desirable to use a traction or crab-reel locomotive, the locomotive not entering the rooms, but using the reel as a room hoist to pull the cars out of the rooms and lower the cars into the rooms.

The rated speed of storage-battery locomotives is 3½ miles per hour, while the rated speed of trolley and reel locomotives is usually six to eight miles per hour. In spite of this difference in speed, it has been found that where conditions are right for the application of storage-battery locomotives—that is, concentrated mining with easy grades—a storage-battery locomotive can gather practically as many cars as the trolley and reel locomotive. This is due to the fact that in the rooms the trailing load consists of one or two cars, and with series motors the locomotive speed is considerably higher than the rated speed. The runs in the rooms are relatively short and the trolley and reel locomotives do not have a long enough run to reach their balancing speed, so they must be operated on resistance, which is wasteful of power.

As a result, there has grown up a demand for gathering locomotives with a rated speed of approximately four miles per hour. It has

been found by test that the low-speed locomotive will gather as many cars as the higher-speed locomotive where the hauls on the entry are not too long, and with approximately half the power consumption. The lower-speed locomotive also lowers the reel-cable maintenance.

Since locomotives are equipped with series-parallel or series and parallel controllers, the same power saving could be obtained by using the series position in the rooms and the parallel position on the entries. It is, however, difficult to teach the motorman to operate in series, as he considers the parallel position like the high gear on an automobile, and every automobile driver likes to use high gear whenever possible. There are now in service locomotives arranged so that it is possible to operate only in series when operating from the reel cable, and to operate only in parallel or series-parallel when operating from the trolley. This insures saving power when operating in the rooms and permits high-speed operation in the entries.

The increased demand for safety in mines has led to the development of the so-called permissible storage-battery locomotive—that is, a locomotive designed to meet schedule 15 of the United States Bureau of Mines and specified by the Bureau after test as permissible for use in gaseous mines when all the conditions, as outlined on the approval plate, are observed. Permissible locomotives are in successful operation in a number of mines where the gathering is concentrated and the grades are not severe. With heavy grades, the battery maintenance becomes very high and the output per locomotive falls off. This has led to the demand for explosion-tested, gathering-reel locomotives, on which all the electrical equipment has passed the explosion test of the United States Bureau of Mines. The Bureau has so far refused to approve as "permissible" any locomotive equipped with either trolley or conductor cable reel or both. Explosion-tested conductor cable-reel locomotives are in successful operation in a number of mines and, in some cases, haul 25 to 50 per cent. more cars at less expense than permissible storage-battery locomotives in the same service.

On four-ton battery locomotives, the total motor horse-power is 11 or 12, as compared with approximately 35 to 40 horse-power on a four-ton trolley locomotive. On a six-ton battery locomotive, the total motor horse-power is 22 to 24, as compared with 50 to 80 horse-power on a six-ton trolley locomotive. Due to the lower speed of the storage-battery locomotive, the motors have ample capacity for the

service which the weight of the locomotive permits it to perform. On a six-ton, low-speed, trolley and reel locomotive, motors of 18 to 20 horse-power each have ample capacity for the service, as they have 1.5 horse-power per ton per mile per hour and will do as much work without overheating as two 30-horse-power motors on a locomotive with a rated speed of 6 to 6½ miles per hour.

An old rule-of-thumb method of selecting motor capacity was 10 horse-power per ton. This rule worked fairly well 10 to 15 years ago, but with the increased speed of haulage locomotives and increased weight of cars with longer hauls it was found that the motors were not large enough. It is necessary to consider the speed in applying motors. The ability of a motor to stand up under mining service depends both on the continuous rating of the motor and the capacity to withstand the overloads which occur in accelerating or in pulling heavy trips up long grades.

Mine-locomotive motors are rated on the one-hour basis and usually totally inclosed. The continuous rating depends on the radiating surface, while the hour rating depends on the thermal capacity, which in turn depends on the weight or volume of metal. On smaller motors the continuous rating is approximately half the hour rating and, since the surface does not increase in proportion to the volume, the ratio of continuous to hour rating decreases as the motor size is increased.

If the horse-power per ton per mile per hour is 1.5 or more, the motors will, in general, have sufficient capacity to perform any service which the weight of the locomotive will permit. The motor selected on this basis will not be seriously overloaded during acceleration or on grades unless the grades are unusually long or unless the haul is so long that the delays at the ends of the trip and the return trip do not permit the motors to cool appreciably before starting the next heavy trip.

The continuous rating of a motor may be improved considerably by using perforated or ventilated covers, but these permit mine dust to enter the motor, and this has a detrimental effect on the life of the insulation, commutator, and brushes. If the armature is equipped with a fan in addition to the ventilating covers, so as to increase the cooling effect of the ventilating air, the mine dust moving through the motor rapidly under the action of the fan has an abrasive effect on all the surfaces over which it passes.

The motor capacity may be further increased by the use of forced ventilation, using a separate motor-driven blower to supply the cooling air. If the fan intake is well screened and the fan is located relatively high on the locomotive so as to be away from the sand and dust stirred up by the locomotive wheels, this is a very successful way of practically doubling the continuous capacity of the motors. Forced ventilation has the disadvantage of requiring an additional piece of apparatus on the locomotive, but has been adopted as standard practice by several manufacturers on three-motor locomotives weighing 25 to 35 tons.

The rated speed of haulage locomotives varies from seven to nine miles per hour. This is the speed at 25 per cent. adhesion, which is the maximum adhesion which can be depended upon for running without the use of sand. As the motors are of the series type and increase in speed as the load decreases, the average speed in operation will be above the rated speed unless voltage conditions are poor. Since the speeds are from seven to nine miles per hour, motors with a capacity of 10 horse-power per ton do not have a capacity equivalent to 1.5 horse-power per ton per mile per hour. As the rated speed of the locomotive is increased, it is necessary to increase the horse-power of the motors.

In the same way, on gathering locomotives, as the rated speed is decreased, the horse-power may be reduced below 10 horse-power per ton, and usually might be reduced even below the equivalent of 1.5 horse-power per ton per mile per hour, since in gathering service the locomotive is handling only one or two cars a large percentage of the time. On the other hand, on the larger haulage locomotives the capacity should be greater than equivalent to 1.5 horse-power per ton, since they are handling heavy trips a large percentage of the time, and on the larger motors the continuous capacity inclosed is not as large in proportion to the hour rating as on the smaller locomotives.

Due to the increase in size of cars and the desire to reduce the number of men employed, it is desirable to use the largest locomotives that the track can stand unless there are limits to the length of trip. Where two-axle locomotives of the maximum size which a track will permit are too small for economical operation, three-axle locomotives or tandem locomotives are employed. Tandem locomotives have the advantage of distributing the weight over four axles instead of three,

will negotiate curves of shorter radius than three-axle locomotives, and in case of failure on one unit permit operation of the other unit with trips of half the usual length. Three-axle locomotives have the advantage of fewer electrical and mechanical parts.

While most locomotives use drum controllers, contactor control is being extensively applied, particularly on the larger haulage locomotives and on tandem locomotives. With semi-magnetic control, the main-motor current passes through the contacts of the reverse drum but, since the drums are interlocked, the circuit can not be broken on the reverse drum while current is flowing. The main circuit is made and broken on contactors controlled by the main or control drum of the controller. The semi-electropneumatic control is similar except that electropneumatic switches are used instead of magnetic contactors, to make and break the main circuit. The use of contactors reduces the maintenance on the main controller to the minimum, and the contactors are much easier and cheaper to maintain than the contacts on the main controller.

In a few mines main haulage is handled by permissible storage-battery locomotives. These are in successful operation where the mine is nearly level. Usually safety is obtained by proper ventilation of the haulage-way and costs reduced by the use of trolley locomotives for haulage, rather than permissible storage-battery locomotives, especially where grades are severe.

The following illustrations show the various types of gathering or haulage locomotives.

Fig. 1 shows a storage-battery locomotive for gathering service.

Fig. 1. Storage-Battery Locomotive.

Fig. 2 shows a "permissible" storage-battery locomotive.

Fig. 3 shows a low-height combination locomotive with an 80-volt storage-battery for low-speed gathering, and 250-volt motors for operation from a trolley on the entries.

Fig. 2. "Permissible" Storage-Battery Locomotive.

Fig. 3. Combination Locomotive.

Fig. 4 shows a low-height conductor cable-reel locomotive. This locomotive is 23 inches high. When equipped with contactor control, the controller can be mounted vertically instead of horizontally with a height of 23 5/16 inches over the controller handle.

Fig. 5 shows a six-ton locomotive 28 inches high, equipped with both crab and conductor cable reels.

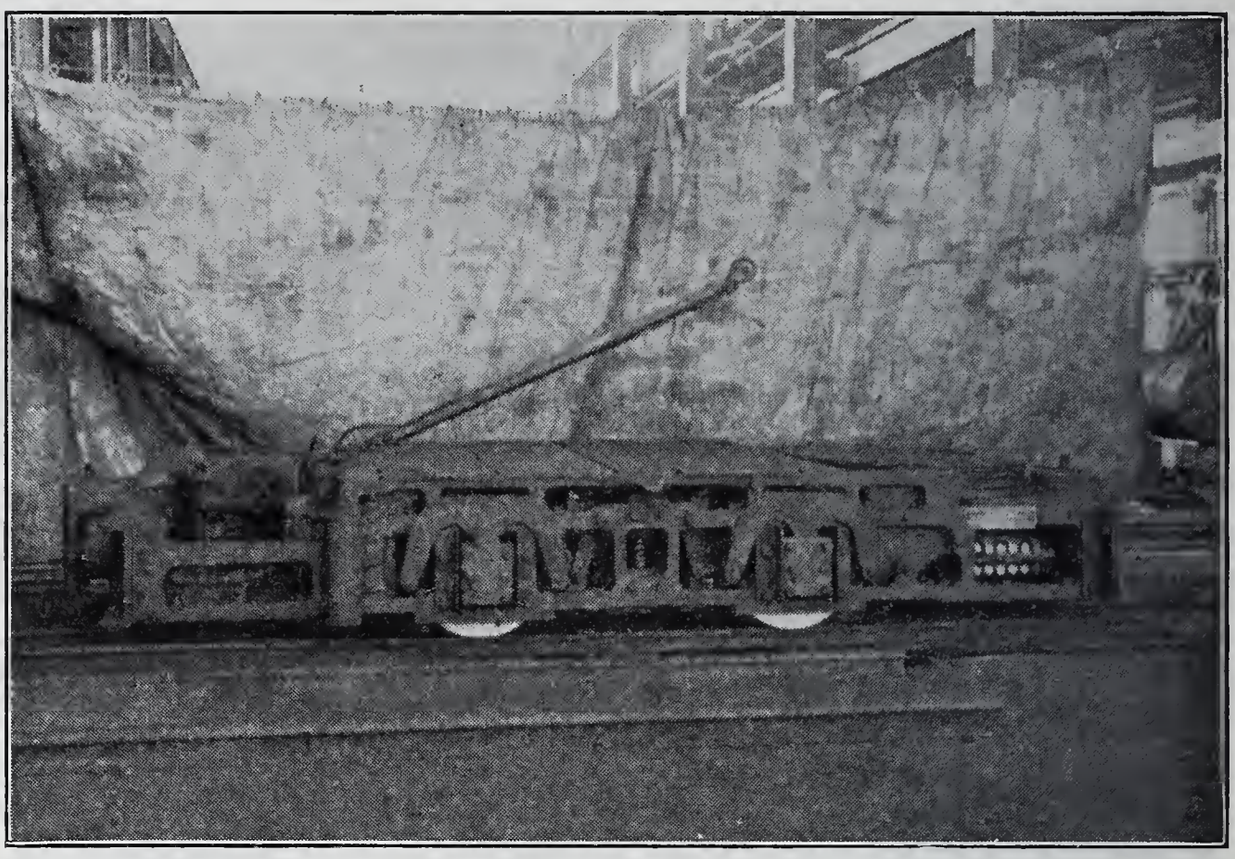

Fig. 4. Conductor Cable-Reel Locomotive.

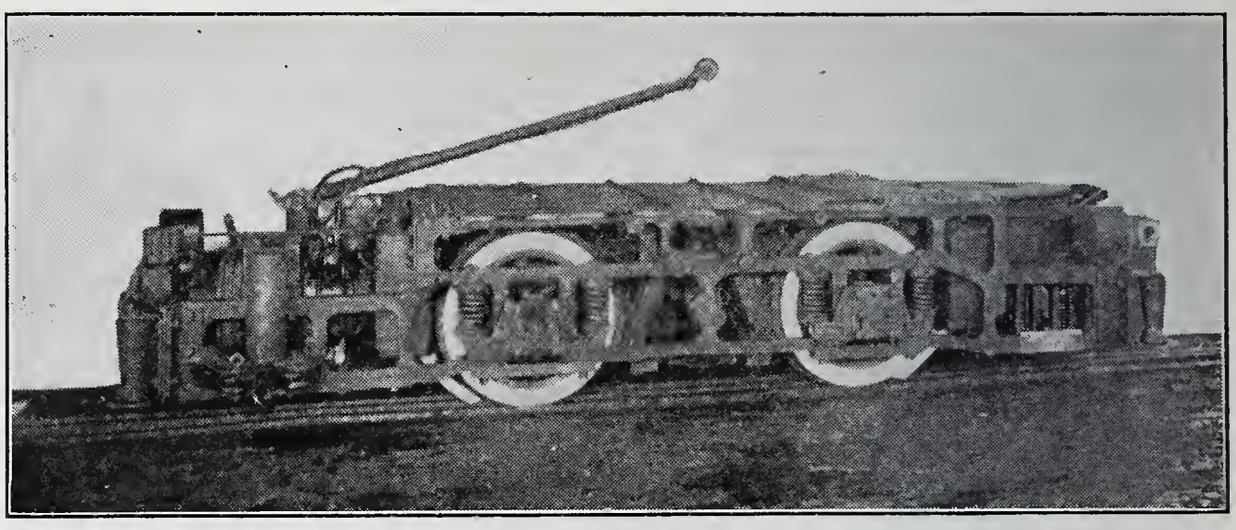

Fig. 5. Six-Ton Locomotive.

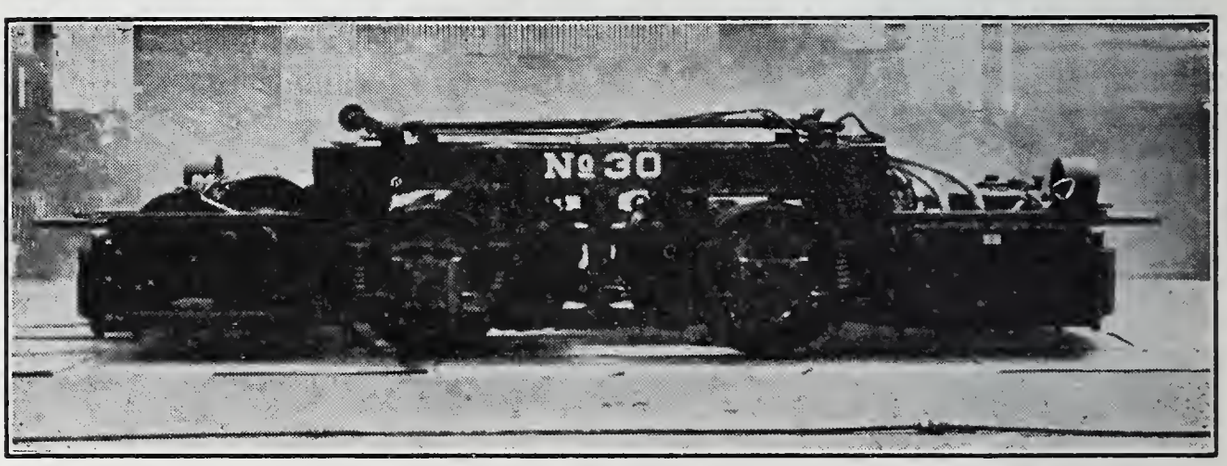

Fig. 6. Explosion-Tested Locomotive.

Fig. 6 shows an explosion-tested, conductor cable-reel locomotive.

Fig. 7 shows a 10-ton haulage locomotive, 36 inches high.

Fig. 8 shows a tandem locomotive consisting of two 13-ton locomotives. A tandem locomotive has a number of advantages over a three-axle locomotive of the same weight since it will negotiate shorter curves at less weight per axle and permits of separating the two locomotives when desired for secondary haulage work.

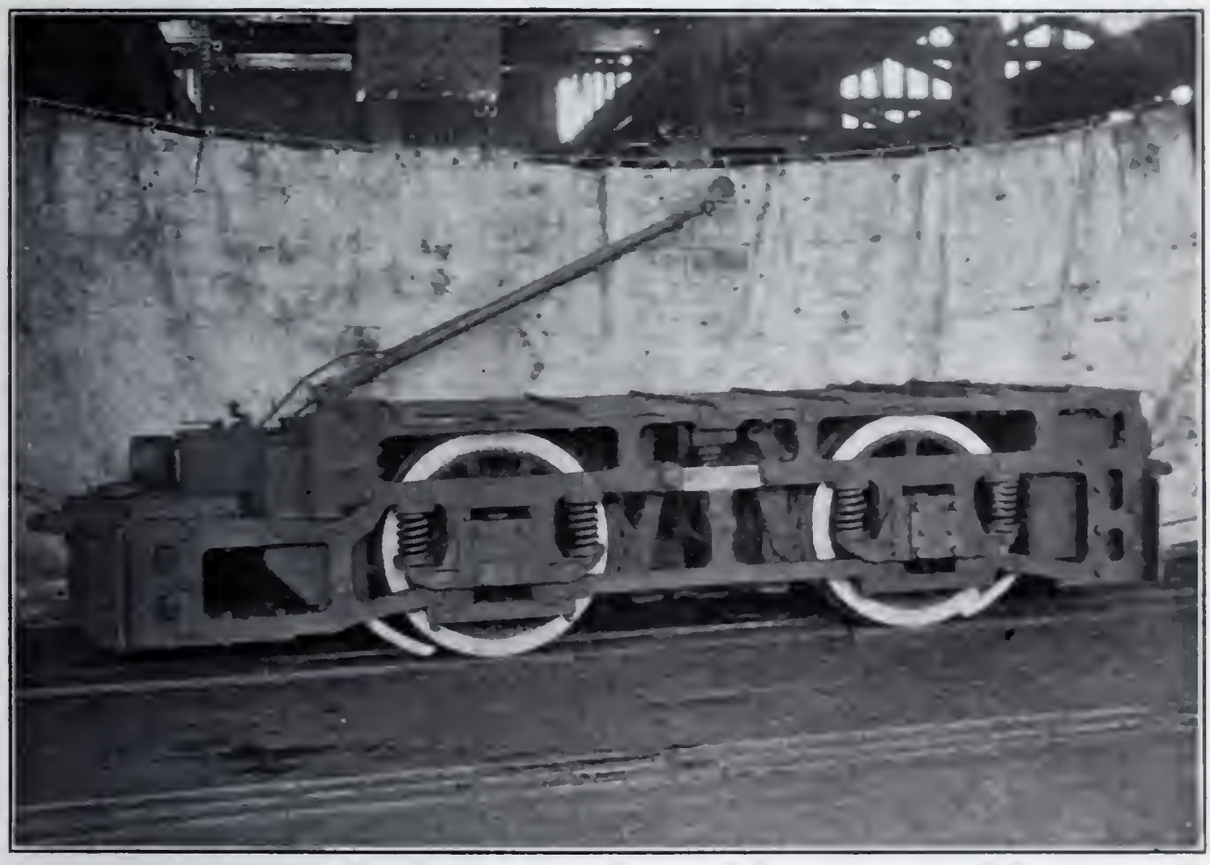

Fig. 7. Ten-Ton Locomotive.

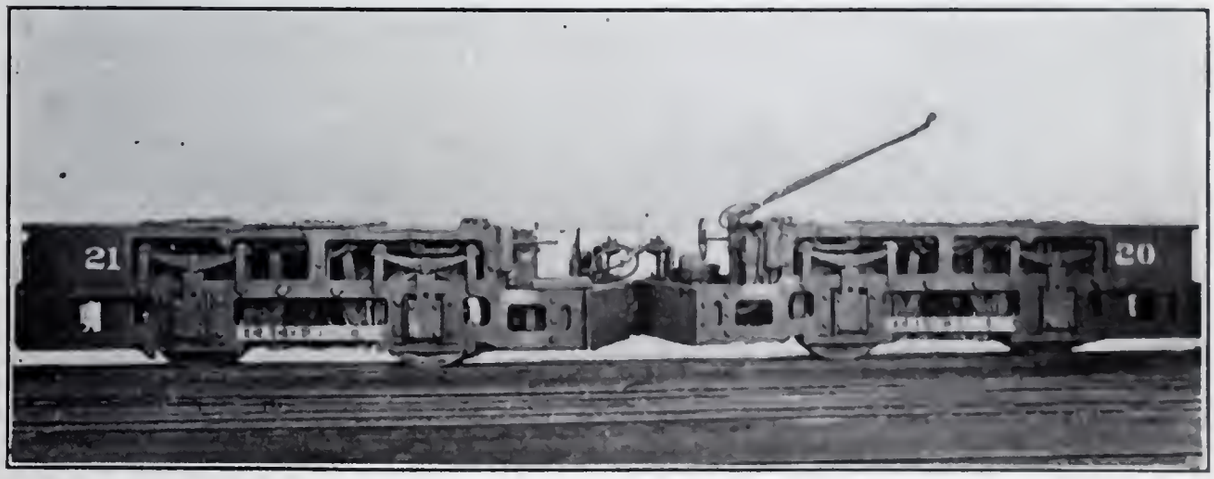

Fig. 8. Tandem Locomotive.

Fig. 9 shows a 20-ton locomotive equipped with two 150-horse-power motors, semi-electropneumatic control, and air-brakes. This is the highest power two-axle locomotive as yet built for mine service.

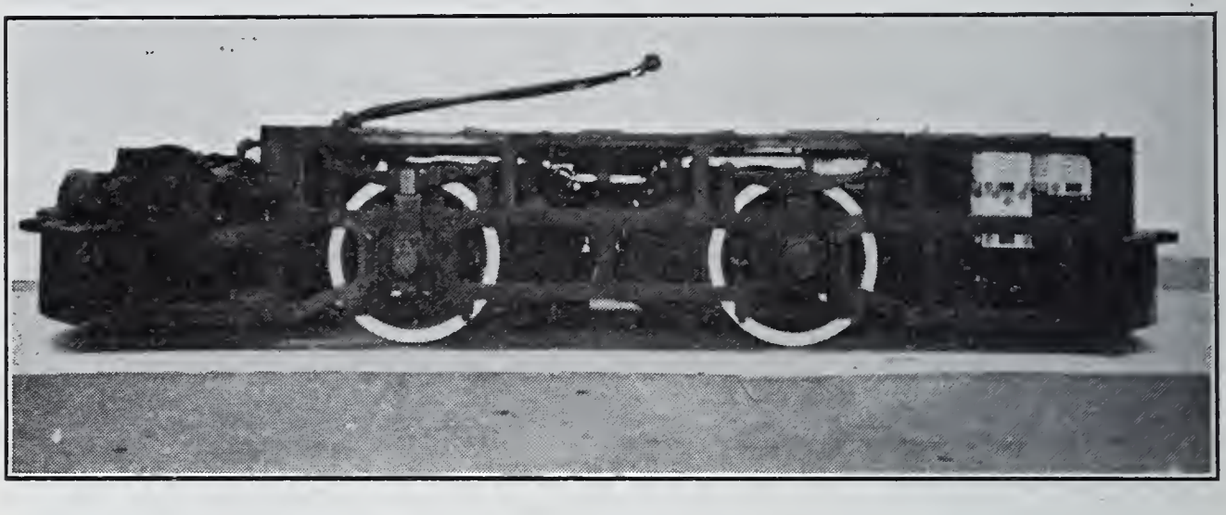

Fig. 9. Twenty-Ton Locomotive.

Fig. 10 shows a 35-ton, three-axle locomotive for 500-volt operation with drum controller.

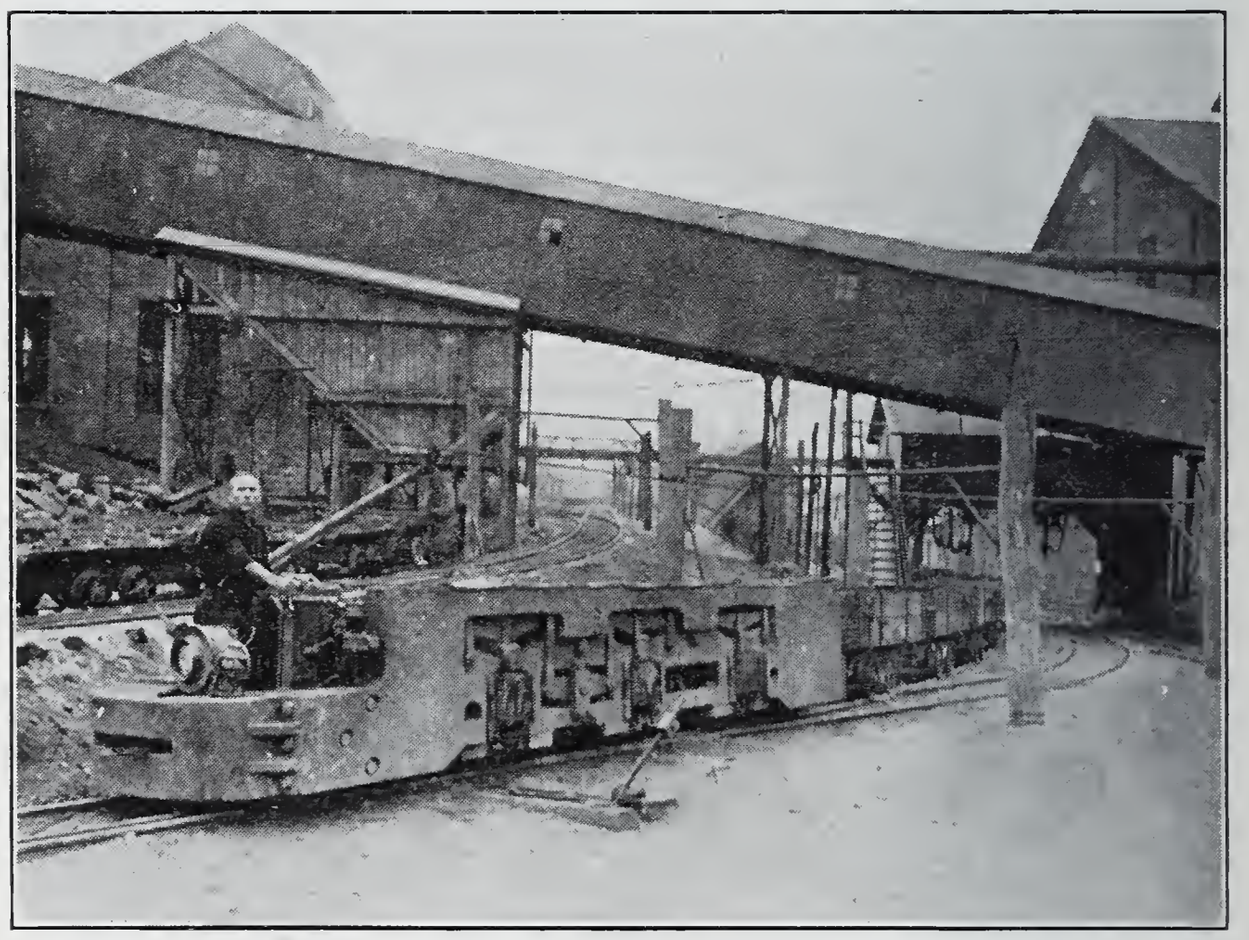

Fig. 10. Thirty-Five-Ton Locomotive.

MECHANICAL LOADING OF COAL IN THE PITTSBURGH DISTRICT*

By L. E. Young†

The Pittsburgh district was one of the first to try out mechanical loading devices, and, while at the present time the application of such devices is not general and the total amount of coal mechanically loaded is only a small percentage of the output of the district, there is a growing interest in the subject. At the present time there are more companies trying devices for loading than ever before and there are more varieties of equipment being used.

Considerable has been written on the subject and note may be made appropriately of Bulletin 28 of the *Mining and Metallurgical Investigations under Auspices of Carnegie Institute of Technology, United States Bureau of Mines, and Mining and Metallurgical Advisory Boards*, entitled "Mechanical Loading for the Coal Mines of the Pittsburgh District," by H. F. McCullough and J. W. Paul.‡ The conclusions of the authors were briefly as follows:

"1. Mechanical loading has not yet been made a success in the Pittsburgh district. Loading machines applied to present systems of mining are subjected to so many delays resulting from discontinuous mine-car supply, time required to move from place to place, and uncoordinated operating procedure, that the machines have not been able to effect material saving over hand-loading in any case, and in most cases costs have been greater than with hand-loading.

2. With adequate management, loading machines may be able to reduce costs when used with present room-and-pillar systems of mining."

During the time that has elapsed since this report was made, some progress has been made in the application of mechanical devices in the district, due to improvements in the machinery available, modification of mining practice, and changes in labor conditions. The improvement in facilities for cleaning coal mechanically loaded is also an important factor contributing to the progress that has been made.

It will be assumed that the typical conditions under which coal would have to be loaded in the Pittsburgh seam are generally known and that only brief comments in a preliminary way are necessary.

*Presented at Mining Conference, October 20, 1927. Received for publication March 1, 1928.

†Vice-President, Pittsburgh Coal Co., Pittsburgh.

‡Carnegie Institute of Technology, Pittsburgh. 1926. $1.

The coal varies in thickness from five to eight feet and generally lies flat. Immediately overlying the coal there is a draw slate which varies in thickness up to several feet. In places it is missing, but the average thickness is from 8 to 12 inches. Usually it must be taken down when or immediately after the coal is loaded out. The material above the draw slate will generally stand without heavy timbering, but in many places cuts badly when subjected to changes in temperature and moisture content of the mine air.

At a height of 18 to 36 inches above the bottom of the seam are two thin seams of slate, about two to three inches apart, and generally called "binders." The floor is commonly a hard fire-clay.

In parts of the seam there are rolls in the floor, and clay seams cut across the coal-bed in varying directions. While, in general, the bed lies flat there are undulations locally and in some places well defined synclines and anticlines. In practically no portions of the field are the grades serious enough to interfere with the operation of loading machines mounted on caterpillar treads.

Various systems of mining have been tried in the district, but this paper will be confined mainly to the recent work in the mines of the Pittsburgh Coal Company.

With the exception of one mine, Banning No. 2, the room-and-pillar system of mining is used, the room centers varying with local conditions and with the type of cutting-machines used.

At the present time the equipment in use consists of 14 Joy machines of the 5 BU type, all "permissible"; seven Eickhoff shaking conveyors of the MRA type; four Eickhoff shaking conveyors of the MT 15 type; four Gellatly face conveyors; two Jeffrey 47 A conveyors; four Jeffrey 49 A conveyors; and two Myers-Whaley machines, one of which is "permissible."

The Joy machines are being used to drive entries and to load room and pillar coal at Montour No. 10, Banning No. 2, Somers, and Crescent mines.

Eickhoff MRA's are used to drive entries at Warden, Montour No. 9, and Montour No. 10; the Jeffrey conveyors, the Gellatly face conveyors, and the Eickhoff MT 15's are used in rooms in Montour No. 10.

One Myers-Whaley was used to grade an entry at Banning No. 2 and the other to do similar work at Westland mine. Later, the

former machine was transferred to Montour No. 9 to drive entries where there is heavy draw slate.

The organization of crews to operate the Joy machines depends on the character of work being done, whether there is mechanical or animal haulage, whether or not draw slate must be handled, and other related items such as timbering, track requirements, etc.

At Somers mine, where there is mule haulage and the cutting is done with short-wall machines, the crew to operate a loading machine in entries consists of two men on the loading machine; two men on the cutting machine; one roadman; two men on drilling and shooting; one clean-up man; two drivers, and two car pushers. In rooms there would be an additional clean-up man and a slate man.

At Crescent mine the Joy machines are used to drive entries, and the coal is undercut and sheared with a Sullivan CLU using a nine-foot bar. The cars hold 2.7 tons when mechanically loaded and are switched by electric locomotives.

At Montour No. 10 four Joy machines are being used to drive entries. As at Crescent the coal is undercut and sheared, using a nine-foot bar. A drill is mounted on the cutting-machine and both coal and slate are drilled when the place is cut. The coal is shot first, and after the coal has been loaded out the draw slate is shot and loaded out with the Joy machine.

At Banning No. 2 mine a block system of mining is being used and the top coal is kept up by using top-cutting machines. Four Joy machines are used at present to load coal into cars holding 1.7 tons; these, however, are to be replaced shortly by steel cars to hold four tons. Electric gathering locomotives will replace mule haulage.

In the use of shaking conveyors to drive entries the crew generally consists of three men, who divide among themselves the various tasks of cutting, drilling, shooting, loading coal, taking down and loading slate, and moving up equipment. Under difficult physical conditions the company has succeeded in driving entries by this practice.

In a section of Montour No. 10 mine where there is heavy draw slate, it was proposed that top coal be left up and that where the thickness of cover was not great a system of driving up rooms and extracting pillars at a rapid rate be developed. When top coal is left in this mine there is not sufficient height to permit taking the pit-cars into the rooms; therefore, a conveyor system is being tried. The lay-

out in use is tentative, and the plan to be adopted will depend on the results obtained.

The problems being met are the same ones that have confronted all who have done pioneering work in the Pittsburgh district and other fields. Face preparation, handling of draw slate, maintenance of equipment, training employees and operating officials, and co-ordination of operations are among the most important. Mechanical loading normally results in concentration of workings, and unless there is real dispatching there will be serious congestion, particularly of equipment operating on the track. Unless full advantage is taken of the opportunity to secure a large tonnage daily from a small area many of the predicted economies of mechanization will not be attained.

A complete and careful inquiry into the capital invested in loading machines, cutting-machines, drilling equipment, and locomotives in order to produce the daily tonnage from a territory or mine should always be made in order to determine accurately the proper charges for depreciation and obsolescence. Offsetting these capital charges are savings on capital charges on mine track, airways, etc., and corresponding operating labor charges that may be reduced if operations are concentrated.

Progress is being made rapidly in some fields in the analysis of these economic problems and the development of orderly cycles of operations will have much to do with the engineering and economic analysis of mechanization problems.

DISCUSSION

G. F. Osler:* I have not prepared a paper, so my remarks will be entirely informal.

The results we have so far obtained are not good enough to warrant going into costs, but I can explain briefly our methods and the results.

Prior to April 1, 1927, at two of the mines of the Pittsburgh Terminal Coal Corporation we had Eickhoff conveyors in use, one mine using the conveyors in recovering pillars in a section which had been abandoned where the coal was thin and carrying a sandstone top in place of the regular draw slate. We recovered nearly all the coal at about the cost of pick mining, but recovered the greater part of the

*Vice-President, Pittsburgh Terminal Coal Corporation, Pittsburgh.

timber and saved a large amount of cleaning-up expense, as it was not necessary to lay track into these pillars. The other conveyor was used in mining on a modified long-wall system. We had previously tried the same system, using mine-cars along the face. This was a failure. Two narrow rooms were driven full distance, about 250 feet, and these rooms connected by an entry. These rooms were about 110 feet from center to center. The cutting was done with a short-wall machine. At first the slate was taken down after each cut, but we ran into trouble. Then it was decided to try to keep the slate up. This we did by posting close to the coal after cutting, and, before shooting, posts were placed six feet apart from center to center. Falls were made every five cuts. This face was worked back 160 feet up to April 1, but no work has been done on it since. The face is still open at this date.

All work was done by the day, and the cost of labor was about the same as hand loading, but the timber costs were excessive. The coal, however, mined larger, it not being necessary to use as heavy charges of explosives.

In July of this year a Myers-Whaley shoveling machine was installed at No. 8 mine—this under non-union conditions at a time when everything was unsettled. We had very heavy slate in the section where it was used, and we shoveled both the coal and the slate with this machine. Four entries with the break throughs made a total of seven working places. No attempt was made to keep the slate up, it being taken down after each cut. A locomotive, a mining machine, the shoveling machine, and an electric coal drill were used all the time in that one section, and we were getting from 60 to 90 tons of coal a day, depending on how things went. Transportation generally was the big problem.

I do not intend going into the labor conditions, but our houses are tied up by court action, and we have had more or less trouble keeping men on this work. On the Joy machines we have had the operators who worked over in the Ohio district, and they were absolutely "sold" on the Joy machine and we had to get them converted to the Myers-Whaley. Under these circumstances the coal cost us more than it would have cost us with hand loading under the present scale; but we were making better progress with the work than we would have by hand loading, especially under thick slate conditions. These

entries have gone about as far as we have to drive them and we have temporarily stopped using the shoveling machine.

In Ohio in a mine of the Powhatan Mining Company, operated by the same interests as the Terminal Coal Corporation, there were five Joy loading machines in use before April 1 of this year. These machines were working entirely on entry driving. The costs were practically the same on entry driving as they would have been for hand loading, but there was twice as much progress made over the Pittsburgh seam, or what is known in Ohio as the No. 8 seam. There is a soapstone stratum, which comes down freely and is hard to handle. It is not so hard as the Pittsburgh slate. It disintegrates very quickly. However, they were able to take two cuts a day out of an entry in which it would have hurried them to take one out by hand loading.

Where the stone over the coal was thick the costs were less per ton of coal produced than by hand loading, but on an average the costs were about equal; but, as I said before, they made twice as much progress with the Joy machines on development as they did by hand loading, which was very welcome there because there was a great need for development. In the No. 8 district they do not take out ribs and all the coal is produced from rooms, and for that reason it is necessary to drive nearly twice as much entry as it is in the Pittsburgh district. There is nothing else I can add to that.

Our company has not had very much experience with mechanical loading, nor I as much as Mr. Young, but have had enough to agree with Mr. Young on the amount of equipment tied up in this method of mining; but I am convinced that if you can concentrate the work in a small area you can cut down the number of men and your transportation costs and track expense, and this will make up largely for the expense you will have outside cleaning coal. I do not believe there is a man here who does not know the difficulties there are in the Pittsburgh seam for mechanical loading of coal, so there is not much use in going into that.

I feel that the loader that will eventually win out in this district is a small, mobile loader used with conveyors.

W. L. Affelder:* Two things have impeded the progress of the adoption of mechanical loading in the Pittsburgh district—draw

*Assistant to President, Hillman Coal & Coke Co., Pittsburgh.

slate and the lack of flame-proof equipment. The draw slate has been a problem, and always will be, in connection with any mechanical loading system in the Pittsburgh district. The flame-proof feature, as far as electrical equipment is concerned, has to a certain extent been solved. There is still a good bit to be done in connection with the development of government-approved electrical equipment. The lack of that equipment has, of course, eliminated the use of mechanical loading equipment in a number of local mines which, though they are not decidedly gaseous mines, are gaseous enough to require that type of equipment.

The Myers-Whaley Company was one of the first to develop flame-proof mechanical equipment, and I might say that our company has the first flame-proof machine, and also either the third or fourth flame-proof machine, that they put out, so we did not lag very much behind their development. We are not using these machines for coal loading and never have used them for that purpose. We use them exclusively for rock work, either top rock or bottom, and have found them very efficient and favorable for that type of work. We also have one of the first flame-proof Joy machines, which has been used at a mine on Ten-Mile Creek in Washington County. It is working in a mine in which ordinarily draw slate has to be taken down. In this particular installation it is being used only in entry work in conjunction with a top-cutting machine, and sufficient top coal is left in place to hold up the draw slate. Just at present the machine is idle because a section of snap coal and snap roof has been encountered and it is practically impossible to hold up the roof coal and the slate. Besides it is practically impossible to load the coal clean enough to make satisfactory cleaning possible on the tipple. For the time being we are hand loading in these particular entries.

One thing that is retarding progress in the Pittsburgh district is the lack of a flame-proof shearing machine. We are using a Goodman top cutter, with the Joy loader, but we know from experimental work which we have done that we can get very much better and larger and cleaner coal if, in addition to top cutting, we shear the coal. There is a Sullivan combination bottom cutting and shearing machine on the market, but that does not permit of leaving up a sufficient amount of coal to hold up the draw slate. As far as the quality of coal is concerned, it is just about an even break whether top coal is left up or

bottom coal is left in place. The few inches at both the top and the bottom are of inferior quality.

Our experience, so far as mechanical loading is concerned, has been more with conveyors than with loading machines. To a certain extent I am a very firm believer in the idea that the permanent solution of mechanical loading in a great many mines will be in the use of hand-loaded conveyors. We have a mine in the central part of the state where the coal runs from a little less than four feet to 5½ feet in thickness. In this mine during the past year and a half we have been giving a considerable amount of attention to conveyor work. The conveyors are entirely hand loaded. We can fully confirm Mr. Young's statement that concentration can be effected without congestion, because we work but one conveyor place in an entry. We drive rooms on 75-foot centers, taking half of the coal in the room and the other half in the retreat, and only one room at a time. We place a trip of 15 to 20 mine-cars (each holding about 1¾ tons) beyond the room and, if there is a sufficient amount of grade, we use a car retarder in feeding the cars past the loading point. If there is not enough grade we use a "Brownie" hoist. We started out with only one conveyor of the drag type, and we gradually added to our equipment until we now have nine conveyors in operation in that mine, with three more on order; so this would indicate that we are pretty well convinced of the economy of mechanical loading of this type.

The statement has been made that in the Pittsburgh district it is about a toss-up as to whether you can make money on mechanical loading as compared with hand loading. We know absolutely that in this particular mine we are effecting a very considerable saving in labor cost by the use of hand-loaded conveyors. I have before me a comparative cost statement for the conveyors in this particular mine from the first of January to the end of September 1927. Charged against the conveyors is the actual labor involved in cutting and loading, and such yardage and dead work as applies to them, all up-keep and repair labor, the cost of explosives, and the cost of repair materials. There is nothing included for either power or depreciation. The statement for the nine months shows a production of something over 71,000 net tons of conveyor coal and a cost for the conveyor coal of exactly two-thirds of what the coal would have cost as hand-loaded coal under the scale existing at that particular mine. If a

tangible labor saving of one-third can be effected, there is certainly a decided advantage. There is also a considerable intangible saving which we do not attempt to figure. We do not charge into this comparison what it would have cost to haul the coal from the face of the rooms to a point in the entry where it could be picked up by the locomotive. We do not take into consideration the saving in track laying or in track material, nor the saving from quick operation. We drive the room up and draw the rib in five or six weeks, and that quick operation gives a considerable amount of timber and dead work. We are satisfied that with a tangible saving of one-third the labor cost we are actually saving considerably more than that amount. The system ties up one mining machine for each working place. There being no tracks, it is not feasible to move the machine from one room to another.

As far as tonnage per unit is concerned, I would not believe any coal-mining man under oath regarding his production on conveyors, and do not insist that you believe me. I have investigated some installations where I had the positive assurance of the superintendent that he was getting 70 to 80 tons a day per unit from his conveyors. Upon inspecting the tipple sheets at one mine where such a statement was made, I found that the production of the preceding eleven days had averaged a little over 43 tons on each of the two conveyors in use. In the first nine months of 1927, four of our conveyor units which were installed in 1926 have actually developed 75, 74, 65, and 63 tons a day, or a general average of about 70 tons, which we count upon as an average output per unit. There are five men in a crew. When you figure that a crew produces 70 tons a day loaded in small mine-cars in the entry, you are not getting 14 tons per loader, but you are actually getting over 20 tons per loader. The man out in the entry could properly be considered as offsetting a driver, because a driver in this mine could hardly gather and deliver to a mine-haulage locomotive more than 70 tons of coal. The four men inside the room not only load the coal, but actually do all the cutting, drilling, and shooting. You might well consider one of the men in the room as a cutter, which leaves but three men to be classed as loaders. The three loaders are, therefore, loading 70 tons a day, or almost three times the daily output of the regular hand loaders employed in this mine, as the latter average only eight tons. This results in real con-

centration, and if a mine were being opened as a mechanical mine with such a production as this some of the cost of mechanical installation would be offset by the reduced number of horses required.

One mistake that can easily be made in connection with mechanical loading is to try to get too much machinery in too small an area. It just so happens that we have plenty of development work in this particular mine and we can put a conveyor in each entry and work simply one room at a time, driving it up and working the rib open ended. The haulage does not interfere with anything that is going on farther down the entry. Two or more rooms can be worked by the use of cross conveyors, but that introduces some complications that will sometimes interfere with, rather than help, production.

Mr. Young made the statement that three elements are important in mechanical loading—transportation, the mining system, and management. In our particular case we did not have to change our mining system at all. We were working room and pillar. The transportation problem has been simplified by having only one place in one butt entry. As far as management is concerned, we have not had any serious difficulty in connection with the introduction of conveyors, because our men are able to make better wages on the conveyors than they ordinarily would by hand loading. We do at times have trouble to keep our crews filled up, but I doubt whether our labor turnover compares unfavorably on mechanical loading with what it is on hand working. The amount of mechanically loaded coal in this particular mine is quite small as compared with the output of the mine. In September we loaded with conveyors 11,500 out of 80,000 tons, but we are gradually increasing that percentage. The conveyors now on order will bring the production up to at least 25 per cent. of the output of that particular mine. We are using conveyors both in room work and in entry work, and we are making some remarkable progress in the latter.

B. H. Canon:* I do not know that I can tell you anything that is going to be very encouraging, but the facts that I will give you are from our experience just as they happened.

First, we started with a room conveyor system with a cross conveyor, and at that time we were just starting the non-union fight. We

*General Manager, Clinton Block Coal Co., Pittsburgh.

put the men on by the day and tried to operate the conveyor, paying wages of $5 a day. It went pretty well as far as production was concerned. The average per man was fair, but finally the men doing the shoveling into the conveyor came to the superintendent with this statement: "We would much rather work loading mine-cars than shoveling into the conveyor, at $5 a day, because if we want to take a smoke or eat a bite of lunch, we can sit down in the room without some shift boss yelling at us to get to work. If we make $6 or $7 a day on the regular undercutting and loading into the cars, why should we get only $5 a day for this work?" We had the best men in the mine on this work. In order to increase production, we abandoned the conveyor and went back to the old system of undercutting with machines and hand loading. That was our experience with the conveyor. Of course, we had draw slate in this mine.

Then we got a Joy loader. That worked along fairly well for a while, but we had anywhere from 8 to 12 inches of draw slate, and it was soft stuff. The problem of clean coal then arose. If we undercut the coal and shot the coal down, the slate would come down with it—right down on top of the coal. Then we would have to clear up the slate and get it off the coal before we could put the loading machine to work. The result was that we had a lot of fine slate down on the bottom and mixed with the cuttings. The final result was that we got slack with an ash content of somewhere from four to six per cent. over what it was before.

The next thing we got was a top-cutting machine. We cut right under the draw slate. In one or two cases we got the draw slate to stay up until we finished the cut, but in most cases by the time we got the cut across the face of the room under the slate, the draw slate would be down on top of the coal before the coal was shot, or before we could get jacks set to hold the slate.

Then we tried undercutting and shearing, and top cutting and shearing, and we placed channel iron and timbers back under the draw slate when we were a quarter of the way across the room and tried to hold the slate up with jacks. The draw slate would break down on either side of the timbering on top of the coal.

We finally got back then to the only thing we could do successfully—the old scheme of undercutting and shooting down the coal, clearing up the slate and putting it in the gob, then putting in the

loading machine and loading out the coal. By the time we got through we found the loading machine was working only four to five hours loading coal. The rest of the time we lost in gobbing slate, moving track, and various other things.

This mine is in the west end of the field, on the Montour Railroad at Imperial. If someone could tell us how to get the draw slate to stay up, we would pay him good wages and take his advice. That was our experience with the loading machine in this particular district, although it is our opinion that if you can get draw slate to stay up there is no question about the economy of the loading machine.

We tried dragging the draw slate out of the cut after the coal had been top cut with an Oldroyd cutting machine. The chain speed was so great that the slate was not dragged out, but was cut up about the same size as coal cuttings. The place was so dusty that it was necessary to wear dust masks. It was also necessary to remove all the coal cuttings before we started to drag out the draw slate, and gob all the draw slate cuttings before we started to load coal with the loading machine. The net result was that the same number of men we had on the loading machine, attending motor, and track work could load as much coal by hand as with the loading machine, and the coal was very much cleaner and did not require as much picking on the picking table. The slack had less ash content and the coal, when prepared for market, was a better grade than that loaded with the loading machine. It is our opinion that even in this district, where there is draw slate which is hard enough to hold up until the coal is shot and removed before it is necessary to set in posts, a loading machine can be worked successfully.

F. M. Fritchman:* We have been trying out several different types of loading machine. As we are mining four seams of coal and they vary in thickness we have to take a machine that we can work in the height of seam we are operating. We are using the Goodman scraper in low seams and the Joy machine where we have sufficient height. So far we have not developed a system that has given satisfactory results. Our trouble is not with the machine. They will all load coal, but our trouble is in preparing the coal for the machine and for the market. In hand loading, the bands or impurities we have in

*Vice-President, Rochester & Pittsburgh Coal & Iron Co., Indiana, Pa.

and over the coal can be picked out and gobbed, but where the coal is machine loaded they are broken up to such an extent that it is practically impossible to remove them.

We have also been using the Myers-Whaley machine, but principally on rock work. It has worked out very successfully and has saved considerable money, particularly in rock headings where we had a rock of 2½ inches, or more, in thickness to handle.

Where the seam is clean, or the impurities are such that they do not break up to the extent that they can not be removed by hand, I have no doubt but that mechanical loading will prove successful without any other expense, but where conditions are such that the mechanical loader breaks the impurities into small particles I think it will have to follow mechanical cleaning.

J. A. Donaldson:* I am sorry Mr. Dake was not able to be here. I am not prepared to go into any discussion of this subject. I think it is conceded that handling of coal by machines is just like conveyors, it works successfully, and seems to have gotten to a position of face preparation and the cleaning of the coal. We have gone into that pretty strong, but we have not arrived at a point where we are prepared to talk very much about it. Still I think it can be done.

In Mr. Canon's case, I was out there and I do not think that with that kind of slate it would be possible; but where the slate is of a hard formation I think it is possible to get the coal out without the slate, and then drop the slate. If you can do that you can get good coal; but it is a big question where there are soft bands in the coal. We have not yet arrived at any conclusion as to what it is necessary to do there. I would like to hear what your troubles are and it is our proposition to undertake to help cure these troubles as far as possible.

Edwin H. Johnson:† The Coloder Company has just one installation in the Pittsburgh district. The chief item of interest in this case is the use of storage-battery power with which the coal is undercut, drilled, loaded, gathered, and hauled to the outside. In addition to the safety features of a wireless mine, this company claims an economic advantage due to the small and regular power demand for the

*President, Joy Manufacturing Co., Franklin, Pa.
†Mining Engineer, Coloder Co., Columbus, Ohio.

charging of storage batteries and due to the fact that full voltage at the face is made available with storage-battery power supply. Full voltage results in much higher efficiency in the operation of cutting-machines and loading machines.

At present entries only are being driven, all the tonnage being derived from the advance of a three-entry main and the pairs of butt entries which are turned off, but not driven to completion. Entries are 11 feet wide in seven feet of coal which is capped by 10 inches of draw slate. Part of the draw slate falls on top of the coal when the coal is shot, and part of it is taken down during the loading operation. The draw slate is rather hard and laminated and does not disintegrate readily; therefore it can be quite readily separated from the coal. These advancing faces are loaded out always twice and sometimes three times each per shift, the delay factor being the time required to dispose of the slate.

The equipment of this mine for a 200-ton output includes a "Type F Coloder," a Sullivan CLU cutting and shearing machine, and Mancha storage-battery locomotives and power tanks.

In addition to the rapid advance of entries achieved, these people find that by this method they are producing a better grade of coal at a lower cost than they can produce by hand loading from rooms and pillars in adjoining mines. That is as far as I can go in the comparison of costs, and about all that we have to say about our equipment at this time.

J. W. Paul:* It has been two years since I had contact with the study of underground coal-loading machines, and what my observations were at that time, in co-operation with Mr. McCullough and Mr. Johnson, have already appeared in published form, which has been referred to by a previous speaker. Since then I have not followed up the details of the operations or any of the loading machines. I think the purpose of this meeting is to get experience from people who really have had operating experience, and, in view of the fact that I have had none, what I might say would not add to the discussion.

F. B. Dunbar:† Mr. Affelder has covered our situation very well. Many years ago, at a meeting with the operating officials of the

*Mining Engineer, Pittsburgh Experiment Station, U. S. Bureau of Mines.
†General Superintendent, Hillman Coal & Coke Co., Pittsburgh.

Pittsburgh Coal Company, we were told that three things were necessary for the coming year—cheaper coal, cleaner coal, and more coal.

In talking about loading coal with a machine—either the Joy or any other coal loader, in the Pittsburgh district, under draw-slate conditions—it is necessary to consider clean coal and cheap coal.

We have made some experiments with a Joy machine in room work under draw-slate conditions. The draw slate was about 12 inches thick and quite hard. The coal was undercut with a short-wall mining machine and loaded out with a Joy machine. The slate was taken down and loaded out by the machine, and we also made some experiments in loading the slate out with day labor. Under the draw-slate conditions at this mine it was necessary to shoot the slate and break it with a sledge and wedge before the machine could handle it. It takes a longer period of time to load the slate than it does to load out the coal with the loading machine.

Another difficulty is in getting the coal down in lumps. These loading machines are strictly coal loaders and not digging machines, and we found it necessary to use an excessive amount of powder to get the coal down in shape for the machine to load it without delay. This produced a small-size coal and increased the percentage of slack.

We followed this experiment with a top-cutting machine, leaving from 8 to 10 inches of roof coal and holding the draw slate. This system worked out very well and we were able to control the roof where rooms were driven not more than 15 feet in width. However, we encountered the same trouble in shooting as mentioned above.

What we need is a top-cutting machine that will also shear the coal. There is only one machine of this kind on the market at the present time.

I believe that loading machines can be placed in the Pittsburgh district and operated successfully. It will be necessary to consider a cleaning plant at the tipple and give more care to preparation than heretofore.

The haulage system is being worked out successfully for a coal loader. In using the conveyor system we know what we can do with the conveyors, and find that these machines work out very well in entry driving. One machine can be used in driving a pair of entries.

A large part of the trouble in developing entries properly is in maintaining a uniform haulage cost, and many times we have a tend-

ency to open up rooms in developing the entries to help out the haulage system, and then get into trouble later on in recovering the room coal on the retreat. The conveyor arrangement overcomes the difficulties mentioned, as a motor can place sufficient cars to load out the cut and does not have to travel 1500 to 2000 feet for one carload of coal.

I am sure that conveyors or loading machines can be operated to good advantage in this district. However, I agree with Mr. Young that our problem is in getting the coal cleaned properly and in getting a machine that will operate properly under draw-slate conditions.

J. V. Mavor:* It was only by great luck that I was able to be here, and it is a great privilege. I have been in your country for a matter of only three weeks. I have spent a little time in Canada and I did not pay attention to your particular conditions. I am astonished and exceedingly interested to note how many problems you have here in common with the British conditions. This matter of mining machinery is a problem which applies to everything we have in Britain. That is one of the greatest factors we have in the difficulty in designing and making loading machines for British conditions. The development so far in mining equipment has been only along the lines of conveyors. Walker conveyors, plain conveyors, and the belt type are now becoming quite popular. The belt is required in what we consider a fairly big seam, two feet, eight inches thick. We have not designed a conveyor for our thin seams. You laugh. As a matter of fact, just alongside my home town there is an operation in all the collieries of which there is not a seam thicker than 40 inches, and they are actually operating machines there. As far as I know they manage to keep their heads above water and have done so for the past five years.

I have in mind one mine with coal 16 inches thick and 14 inches of dirt on the pitch, which in that case is 20 degrees. The cutting is done immediately adjoining the dirt, and the dirt is loaded out to the conveyor of the long-wall face before we start cutting the coal. Even under those conditions they are making about three tons per man. In the case of an intermediate band, the cutting is done at the bottom or the top of the band with a view of getting clear of the coal, and whether it is top or bottom depends on the type of parting between the coal and the dirt.

*Mavor & Coulson, Ltd., Glasgow, Scotland.

I know nothing of this draw slate you have, but if it is of any use to discuss it I would like to suggest top cutting to bring out the draw slate before you start loading the coal, if possible.

You are getting a good deal more coal per man than we are, but you are not dealing with the other conditions as much as we are in Britain.

In regard to the conveyors, the belt conveyor is being used very generally at the face. I do not think I have anything further to add to this discussion.

GLENN B. SOUTHWARD:* Mechanized mining or mechanized loading includes the use of mechanical loaders, scrapers, and conveyors. In discussing the adoption of mechanized loading in any particular coal field we should first consider the operations that now exist in that field and discuss the operating methods and the reasons therefor. This might lead to suggestions for improvement in the method of operation and perhaps also in the mechanical equipment. We should also consider how mechanized loading is being used in other coal fields and the conditions under which these operations are being carried on, and it may perhaps be of some value to outline briefly some practices that are in use in other coal fields and to consider to what extent these are applicable to mines in the Pittsburgh region.

Before going into this, however, it may be well to state that the three types of mechanized equipment—loaders, scrapers, and conveyors—are now being used in mines of this district. Mechanical loaders are driving entries in the Pittsburgh seam where the draw slate is left up and protected by head coal. There is another operation where the draw slate is supported on temporary posts while the loading is going on, and the posts are then removed and the draw slate falls. A third operation supports the draw slate in room mining by first shooting out the center of the cut and loading out and timbering the center of the face before shooting and loading the side shots. In this mine, the draw slate over the entire cut is supported by temporary timbers while the loading operation is going on. These are then removed and the draw slate is taken down. The draw slate is not held 100 per cent. of the time; sometimes it falls with the shot, and the slate is removed by hand before the loader starts. However, they

*Chief Engineer, West Virginia Coal & Coke Co., Elkins, W. Va.

are fairly successful in maintaining the slate, and report a satisfactory operation. There are also in this immediate vicinity conveyors working in modified room-and-pillar mining, and there are also some scraper operations working room pillars and modified long-wall faces. These latter operations, however, are not in the Pittsburgh seam and are not unduly troubled by bad top.

One of the most striking uses of mechanized loading in the Pittsburgh field is for the development of narrow work for mining by retreating systems. These operations have demonstrated that entry driving with mechanized loading will advance at from two to three times the rate that could be expected by hand loading, and makes possible the adoption of retreating mining. Under bad top conditions the value of this rapid development and of a retreating mining system is hard to measure in dollars and cents.

It is doubtful whether the thought of mining men who are using mechanized loading has as yet crystallized to the point where it may be said that any particular type of equipment is favored over the other types. All types of equipment are used under fairly similar sets of conditions, and we find strong advocates for each. It is true that mechanical loaders are for the most part used in seams that are greater than five feet in thickness, and it is also true that scrapers and conveyors are more largely confined to seams less than five feet, but there is no distinct limit or line of demarcation. It is equally true that all these classes of equipment are working in both clean seams and seams that have a high percentage of impurities, and they are also used in top varying from good to bad.

In the Pittsburgh field the seams vary from low to high coal, the coal has some impurities that have to be removed, and some of the mines are handicapped by draw slate and bad top. In this, the Pittsburgh field may be less fortunate than other fields where these conditions do not apply to the same extent as they do here. However, there are examples of successful mechanized loading in the low seams of this field and in other fields where the seams are as low as 24 inches. There is an example of successful mechanized loading in this field where a seven-foot seam has a 12-inch parting. In this particular case, the bottom coal is first shot down and loaded. The parting is then removed before the top coal is shot down. In other fields, however, mechanized loading is carried on successfully in seams that have sev-

eral small streaks of impurities that are not cleaned by hand inside the mine. In such case the slate is removed at the tipple by picking-tables or by some mechanical separation, and in such cases there is an additional expense for picking. However, this expense does not offset the economies effected inside the mine by mechanical loading.

The draw slate and the top conditions existing in some of the mines in this field have been cited as a serious detriment to any form of mechanized loading. This is undoubtedly a serious handicap, but it is by no means proved to be an insurmountable obstacle. As an example of mechanized loading under bad top conditions, there can be cited an operation in another state which is working in rooms 24 feet wide where heavy cross-bars are required at least every six feet and in some cases every three feet. Under each cross-bar there are four posts set, and the roof weight there is such that by the time a room has driven to its limit of 300 feet, perhaps 50 per cent. of the posts and cross-bars are broken. In this mine, the management considers that the mechanized loading has effected marked economies over hand loading under these same conditions.

Each field in the United States has its own particular problems and difficulties in some form or another. Some fields, due to their conditions, or perhaps due to a necessity for mining cheaper coal, have developed further than other fields, or perhaps it would be more accurate to say that they are loading more coal mechanically than other fields. The production, however, is not so important as the one outstanding fact which now exists, and that is that in every coal field of any importance in the United States the particular difficulties that have been encountered have been successfully met and some form of successful mechanized loading is now going on.

TRANSPORTATION OF COAL BY BELT CONVEYORS*

By E. C. Auld†

This paper is restricted to consideration of main conveyors carrying large tonnages. For many years, belt conveyors have been used to transport coal for short distances and they are a well known and generally used means of transportation where only one or two units are required to move the coal from one step in its preparation for market to the next, or to load it into either railroad cars or barges on the river for transportation to the consumer. The H. C. Frick Coke Company has four such belt conveyors in operation now at its Bridgeport, Palmer, Gates and Ronco mines. Long-distance transportation of coal by means of belt conveyors had not been tried, however, until the H. C. Frick Coke Company put into operation its conveying system at Colonial Dock in 1924.

It may be of interest to state some of the reasons leading up to the development of this system. The H. C. Frick Coke Company, as the name implies, was originally solely a coke-producing company. All of its mines were developed and its plants designed for the production of coke in beehive ovens. Its mines extended from end to end of the Connellsville coking field, it being the largest individual producer of coke in the country. This company is a subsidiary of the United States Steel Corporation and has furnished coke to the Carnegie Steel Company practically since its organization.

In 1916 the Carnegie Steel Company started the construction of its first by-product coke-ovens at Clairton, which were to be supplied with coal by the H. C. Frick Coke Company from mines located along the Monongahela River and able to take advantage of transportation by water. The Bridgeport, Palmer, Gates and Ronco mines were selected to furnish this coal on account of their being best located to deliver their output to barges. Each of these plants was originally designed to produce coke, and all except Palmer were operating coke-ovens. All of the hoist shafts were located back some distance from the river, with the Monongahela Railroad between them and the

*Presented at Mining Conference, October 20, 1927. Received for publication January 26, 1928.

†Chief Engineer, H. C. Frick Coke Co., Scottdale, Pa.

river. After much discussion as to the advisability of entrusting the entire output of these important plants to such a mechanical carrier, it was decided to transport the coal from each of the shafts to the river by means of belt conveyors. Bridgeport was designed to produce 2000 and each of the other plants 2500 tons a day. Bridgeport was put in operation in March 1917; Gates in July 1917; Palmer in July 1918, and Ronco in October 1918. These plants operated with entire satisfaction. Bridgeport has since been developed to produce 4000, Palmer and Ronco each 5000, and Gates 3000 tons a day. The satisfactory operation of these plants pointed the way to long-distance belt-conveyor operations to follow.

Early in 1919 it was decided to increase the capacity of the Clairton by-product coke plant, requiring an additional daily supply of 8000 tons. As the H. C. Frick Coke Company had no other mines lying directly on the river, it became necessary to bring coal from farther back than ever before attempted. The Colonial mines No. 1, 3, and 4 were selected and an outlet provided through the old Alice mine, purchased from the Pittsburgh Coal Company for this purpose. This required transporting all coal from each of the mines selected, an average distance of about six miles to the river. A belt-conveying system about 4¼ miles long was provided and the coal from the three mines concentrated at one dumping point for delivery to this system. This location of the dump allowed the locomotives to haul the coal a sufficient distance on its way to the river to give them all the work they could do economically. The coal from all three mines is handled by two pneumatically operated rotary dumps, each 374 feet long, so as to handle an entire trip of 35 cars at a time. They were designed to dump 4000 cars a day. These dumps discharge into a bin beneath them. This bin has a capacity of 1250 tons, or about an hour's storage at the rated capacity of the conveying system. The coal is fed from the bottom of the bin by 34 apron feeders, which all operate together, delivering coal to a 60-inch belt underneath, which runs at a speed of 350 feet a minute. Each of the remaining 18 units reaching from the dump to the river is 48 inches wide and runs at a speed of 500 feet a minute.

These conveyors were designed to handle 1220 tons an hour, or about 8500 tons in seven hours. As this system has been described pretty thoroughly several times, and doubtless many of you have seen

it in operation, I will not enter into any detailed description here. A few figures might be interesting in order to keep in mind the size of the conveying system. Its total length is 22,930 feet, divided into 19 individual conveying units, of which the longest is 2439 feet and the shortest is 321 feet from center to center of head and tail pulleys. The longest conveyor has a net lift of 8.46 feet and is driven by a 150-horse-power motor. The total lift from the tail pulley of the last conveyor inside the mine to the head pulley on the conveyor in the river tipple is 353.32 feet. Only one conveyor operates on a down grade. The greatest lift on any conveyor is 43.42 feet, the length of this conveyor being 786 feet. The next lift to this is 29.64 feet on a conveyor 1320 feet long. The entire system requires about 47,000 feet of belt, 6500 troughing carriers, 2280 return carriers, and a little over 40,000 anti-friction bearings.

This system was completed and put into regular operation April 12, 1924. It carried 1,265,909 tons of coal in 1924; 2,856,431 tons in 1925; 2,964,740 tons in 1926, and 2,303,539 tons in 1927, up to October 1, a total of 9,390,619 tons. The record month was March 1927, with 289,047 tons in 27 operating days, or an average of 10,705 tons a day. In September of that year the system carried 263,165 tons in 22 operating days, or an average of 11,962 tons a day. The record for a single day's operation was made January 15, 1926, when 13,866 tons were carried. The record day's dumping was made September 30, 1927, when 6415 mine-cars were dumped. As this system was designed to dump 4000 cars and carry 8500 tons a day, we can say it has more than justified our expectations.

While these records are highly satisfactory, we have another of which we are very proud. This is our accident record. In all this period of operation we have a total of only three minor accidents to charge against this system, and only two of these occurred while the system was in operation. In August 1924, a repairman, in preparing a belt for splicing after the day's run was over, had a knife slip, cutting his hand. He lost 19 days' time. In January 1925, a workman ran against a shaft projection on one of the shuttle conveyors, bruising his right eye. He lost three days. In July 1925, a belt patrolman had the fingers of one hand caught between a belt scraper and the belt. He lost six days. This makes a record of nine man-days lost time due to accidents during operation, and a total of 28 man-days lost time

on the entire system for a period of a little over three years and six months, with over 9,250,000 tons of coal carried a distance of 4.3 miles.*

Delays in operation are another important element in any method of transportation. We have kept a complete record of every delay on the system since the start of operation. In the figures I am giving you, no account has been taken of any delay of 15 minutes or less, as such a delay is not sufficient to have any influence on the output for the day. The storage under the dumps easily takes care of any delay up to 25 minutes after the system has operated the first hour in the morning. Such a delay in the first hour may hold up dumping of coal, due to the fact that the bin is usually filled up during the night. We have had a total of 24 delays due to the chutes being clogged, amounting to 20 hours and 30 minutes; 10 delays, due to belt splices breaking, amounting to 12 hours and five minutes; seven delays on account of electrical trouble, amounting to seven hours; four delays on shuttle conveyors, amounting to three hours and 20 minutes; and five delays of a miscellaneous nature, amounting to two hours and 30 minutes. This gives us a total of 50 delays, amounting to 45 hours and 25 minutes, or a little over 5½ days in slightly over 3½ years. In this list of delays 10 have been of one hour and over. Very few of these delays have resulted in any loss in output for the day. On April 15 of this year we had a delay of one hour and the system carried 12,090 tons, and on May 2, with a delay of two hours and 50 minutes, it carried 12,127 tons for the day. The delays on account of breaking belt splices came in the early operation of the system. When we started operating we had one mechanical splice in each belt. We have since vulcanized all belts, making them endless, and overcome this source of delay. The clogging of chutes is now the most serious disturbance to operation. We have largely overcome this by putting a flapper in each chute to operate a switch which closes down all motors behind it as soon as it is moved. This flapper is placed just above the normal flow line of the coal, and, as soon as coal starts to pile up, the switch is thrown, shutting down all the system back of where the trouble develops. This clogging of chutes is mainly due to pieces of mine timbers being carried through and turning on end or

*At the time this paper goes to press, the amount conveyed exceeds 11,000,000 tons with no increase in the above accident record.

crosswise in the intersection chutes. With all the safeguards we have been able to devise, this is still a source of trouble.

The maintenance has been very slight. Fifty-seven per cent. of the original belt is still in service. Out of over 40,000 bearings, less than a hundred have been replaced. All carriers, pulleys, and drives are in fine condition, and none of them shows any appreciable wear. All intersection chutes have been renewed once and a few the second time.

This system carries nearly a full load on the belts most of the time, and practically no coal is spilled along the way. This is due to the chutes all being adjusted properly. This required considerable adjustment when the system was first started. After all adjustments were made and the coal was being handled almost perfectly we made careful measurements of each chute, and when the time for renewal came expected to replace them without any more adjustments being necessary. The new chutes were very nearly right, but not a single one functioned properly without adjustment. We now make the bottom plates of these chutes adjustable so they can be changed to suit conditions. A change in the sizes of coal carried often necessitates readjustment of the chutes.

Nothing in an entire system of this kind requires more careful design than the intersection chutes. They must be perfectly adjusted if the belts are to carry a full load. Their proper design also minimizes breakage of coal and wear of belts. We have always claimed that there is practically no breakage of coal on this system from the feeders under the dump to the end of the system at the top of the river tipple. In order to prove this, on June 2, 1925, an ordinary pasteboard carton containing a dozen eggs was placed on top of the coal on belt No. 19 and conveyed through to the No. 1 conveyor at the river front, where it was taken off without a single egg being broken. On the same morning another carton of exactly the same kind, containing a dozen eggs, was buried underneath the coal on No. 19 belt and conveyed from this point to the No. 1 belt, where, upon examination, it was found that the box was still under the coal in about the same position as placed at No. 19, with one egg broken, one slightly cracked and the other ten whole.

This system has operated so successfully that when it became necessary a little over a year ago to make preparations for a further increase in river tonnage there was no question raised as to the method

of transportation to be adopted. The inland mines at Filbert, Footedale, and Buffington were selected to supply river coal. These mines are being consolidated with Lambert, Ralph, and Palmer, which are already delivering coal to the river through the Palmer shaft, to deliver a combined output of 12,500 tons a day at a new river loading plant to be known as Palmer Dock. The present Palmer river loading plant will be abandoned, the coal now loaded there being handled over the new system. This new installation will be quite similar to the Colonial Dock system. While the new system is designed for a much larger tonnage, it is not as long as the Colonial Dock system. Its total length is 15,398 feet and the total lift is 522 feet. The entire plant has been designed in accordance with information obtained at Colonial Dock.

The troughing carriers are almost the same as those in use at Colonial Dock, the design being changed slightly in order to get a better means of clamping to the supporting stringers and giving more resiliency under load impacts. All other features of the Colonial Dock carriers are used on the new one. The return carriers were designed specially for this job. They are provided with a tripping mechanism which allows a carrier to be dropped down below the belt for cleaning or inspection while in operation, without disturbing its alinement. The supporting brackets also drop the belt on the return run about four inches below the supporting stringers, so as to be visible to a belt patrolman at all points on the system. Both troughing and return carriers are completely equipped with ball-bearings and "Alemite" lubricating fittings.

All this group of mines is being equipped with 71-bushel wagons of the solid type, equipped with roller-bearings. The main dump is designed to handle a trip of 30 of these wagons at a time. Only a single dumper is provided to handle 10,000 tons a day, while two dumpers are used at Colonial Dock. This is made possible by the arrangement of the landing. The dump is set level with the top of the rail about a foot above the top of the coal seam at the entrance. The mine wagons being all alike, a trip of empty wagons is always left standing in the dump. As soon as a trip from any mine gets a clear light, it enters the dump, pushing the empty trip out ahead of it. This empty trip then runs free down grade to one track of a double-track empty landing. As soon as the last car enters the dump, the

snapper pushes a button signaling the motorman that his trip is clear. The motorman uncouples his motor and enters the empty landing to get the trip he has just put there. As soon as he has passed the switch leading to the parallel empty track a light is thrown by the motor, again clearing the dump for another loaded trip. The dumping cycle is only 19 seconds and the next trip can follow immediately. The empty trips alternate on parallel tracks and one can be entering while another is leaving. This eliminates all loss of time on the landing. Returning to the mines, the empty tracks cross the loaded ones under grade. This track arrangement cuts down lost time to such an extent that there is ample time to handle 10,000 tons of coal a day over one rotary dumper. This dumper is to be electrically operated.

A separate dumping point is provided for the Palmer coal. The wagons have swivel couplings, allowing them to be dumped without uncoupling. A two-car rotary dump is provided at this point, and provisions made to handle 2500 tons daily. The main conveyor is designed to carry 1800 tons an hour from the point where it receives this coal to the river, while all conveyors back of this point are designed for 1400 tons an hour.

The feeders under the main dump are a new type designed for this system. They are to operate as multiple feeders, the same as at Colonial Dock. We have found that the apron feeders at Colonial Dock rust out too rapidly on account of the water in the coal dripping through them continually. This feeder is simply a circular plate revolving horizontally beneath an opening in the bottom of the bin. This plate is solid and protects the gears beneath it from the water in the coal. It is the only part of the feeder which comes in contact with the coal and is made to be easily renewed. A scraper just above the plate delivers the coal to the belt at any angle which may be desired. Two feeders of the same type are provided at the Palmer dump. One of these feeders operates continuously, and the other is arranged to operate whenever the load on the belt allows additional tonnage to be put on at this point. The motor driving this feeder is interlocked with the No. 6 motor, which drives the next conveyor back so that when the current consumption drops to a certain predetermined point this feeder starts operation, doubling the tonnage of Palmer coal and keeping the five belts from this point to the river fully loaded at all times.

Storage is provided at both of the dumps in order to allow mine-cars to be dumped promptly and returned to the working face. At the main dump we are providing storage space of 1400 tons, and at Palmer 175 tons beneath the dumps. It is necessary to dump a trip of mine-cars every five minutes regularly at the main dump in order to keep the belt system operating at rated capacity. The landing arrangements, however, are such that a trip can be dumped every two minutes if the coal is available. If we started with an empty bin and dumped steadily at the rate of one trip every two minutes, it would be 38 minutes before the bin would be full and we would have handled 19 trips; and five minutes later we would be ready for another. Each day 84 trips must be dumped, and if handled at the rate of one trip every five minutes the work would be accomplished in seven hours. All equipment throughout has been designed to do the work required in seven hours, so as to provide for an hour of lost time any day without reducing output.

The ratio of storage to output is twice as high at the main dump as at the Palmer dump, but the Palmer dump has a provision to double the rate of withdrawal from the bin whenever the feed from the main dump decreases sufficiently to allow the belts to carry the load. This makes them nearly equal in operating advantages.

The conveying system consists of 12 units. The manner of numbering is the same as at Colonial Dock, the No. 1 unit being at the river end and the numbers running consecutively back to No. 11 under the main dump. The No. 12 unit feeds the coal from the Palmer dump to the No. 5 belt on the main line. The No. 12 unit is to carry a regular load of 400 tons an hour, this being doubled whenever the main conveyor can take the additional tonnage. This is a 42-inch belt, operating at a speed of 500 feet a minute. It is located at right angles with the main conveyors. The first three units of the system are to operate on a vertical angle of 17 degrees, 21 minutes. The No. 1 conveyor reaches from the mouth of the slope to the top of the river tipple. It is the only conveyor operating outside. Units No. 2 and No. 3 are in the slope from the surface to the coal seam. This slope is 651 feet long, with a vertical angle of 17 degrees, 21 minutes. There are only two horizontal angles on this system—one at the intersection of No. 3 unit with No. 4, and one at the intersection of No. 1 unit with No. 2. The first five conveyors are 60 inches wide, to carry

1800 tons an hour. No. 6-10 are 48 inches wide; and No. 11, which is located under the main dump, is 60 inches wide. No. 11 conveyor operates at a speed of 350 feet a minute on account of its being a feeding belt. All other conveyors operate at a speed of 500 feet a minute. All units from No. 4 back are mechanically interlocked in the same manner as at Colonial Dock, so as to prevent one unit coasting farther than another when a stop is made. This system is calculated to coast 40 feet when the power is shut off. This coasting will be readily controlled by the mechanical interlock on all conveyors on the regular grade of the coal seam, but this could not be done on the slope units. These units are provided with fly-wheels on the drives, and No. 3 is provided with stored energy to carry it 50 feet; No. 2, 60 feet; and No. 1, 70 feet. This requires a stored energy of 500,000 foot-pounds on the No. 3 unit; 950,000 foot-pounds on the No. 2 unit, and 950,000 foot-pounds on the No. 1 unit. These three units require 60-inch, nine-ply belt in order to take care of the additional stresses, while all the rest of the system, with the exception of No. 12, is fitted with eight-ply belt; No. 12 conveyor is 42-inch, with six-ply belt.

The only radical change in the design of this conveyor system as compared with the Colonial Dock system is in the head, tail, snub, and drive pulleys. On this system we are making all pulleys flat faced, absolutely eliminating crowns. This was not attempted until the theory had been proved at Colonial Dock. About 18 months ago we changed all pulleys on the No. 8 and 9 units at Colonial Dock, having a total length from head to tail pulley of 2439 feet. We started in removing the crown from one pulley at a time, the first one made flat being the head pulley. As soon as this had been tried, the drive pulleys were changed, following with all the snub pulleys in order, and finally changing the tail pulley. After this conveyor was completely equipped with flat-face pulleys, we found that the belt ran exactly the same as it had when it was running over the crown pulleys; we were not able to observe any change in belt alinement. We have since changed several other pulleys on the system and intend to turn down all pulleys on this system, making it completely equipped with flat-face pulleys as soon as convenient. By using flat-face pulleys we expect to get considerably better service out of belts. On pulleys of the sizes to be used on an installation of this kind it has been ordi-

nary practice to use at least a ¾-inch crown, this being what was used at Colonial Dock. With a ¾-inch crown the circumference at the center of any pulley is 4.7 inches greater than at the rim. Taking the case of a 48-inch pulley with a ¾-inch crown, if we allow for a 200-degree belt contact, the seven feet of belt in contact with the pulley must stretch a little over 2½ inches at the center if the entire belt comes in contact with the surface of the pulley. This necessarily throws the main driving strain on the center six inches of any conveyor belt, and we believe this contributes much more largely to the center wear of belts—which is pretty generally noticed on most conveyors—than does the abrasion due to loading and carrying of the load. With a flat-face pulley we are able to get practically a uniform belt tension throughout the entire width of the belt, and by so doing we expect to get considerably better service out of the belt. We found from observation on the Colonial Dock system that in a good many cases the outside of the belt does not even come in contact with the driving pulley until the center has been pulled to such a point that the strains are transferred to the outer edges of the belt. In other words, a crown naturally tends to stretch the center of a belt so as to make the center of this belt considerably longer than the outer edges, to accommodate the crown. This can not be accomplished without overstraining the center of the belt and leaving it weaker than its edges. We have never had any trouble whatever in training the belts over flat pulleys at Colonial Dock and do not expect to have on this new installation. The troughing carriers, we believe, will do all the training that is required without any assistance from the other pulleys.

Two cleaning brushes are provided for each unit of the system, these brushes being driven by small individual motors. As the coal to be carried will be fairly wet, we expect to have a considerable amount of small particles of coal to brush off each of these belts and have provided a brush at the tail-end of each of the units for this purpose. These brushes will brush particles of coal off the belts just after they pass over the head pulley and deliver this coal onto the tail-end of the next unit, these tail pulleys being carried back under the head pulley a sufficient distance to allow this material to be deposited behind the ordinary load placed on the conveyor by the intersection chutes. This eliminates the handling of material brushed off the

belts by shoveling, as has always been done on the Colonial conveying system.

This system requires 2542 lineal feet of nine-ply, 60-inch; 9706 feet of eight-ply, 60-inch; 19,282 feet of eight-ply, 48-inch, and 685 feet of six-ply, 42-inch belt; 800 large, high-duty Hyatt roller-bearings; 31,300 No. 204 and No. 304 ball-bearings in carriers; 2880 of the 48-inch and 1810 of the 60-inch troughing carriers; and 1000 of the 48-inch and 580 of the 60-inch return carriers.

The extreme belt tension on the system will be on the No. 3 unit, where the stress will be 30 pounds per inch per ply. The balance of the system averages about 28 pounds per inch per ply. In installing the belts on this system it is intended to vulcanize all but one splice on each unit, leaving one mechanical splice until such time as the belts have stretched. As soon as the initial stretch is taken out of these belts it is intended to vulcanize and make them endless.

The river tipple is considerably different from the one built at Colonial Dock. There is no provision made on this system for screening the coal, it being the intention to deliver run-of-mine coal to the barges. We have provided storage of 2400 tons in the bin. This coal is distributed over the top of the bin by two 60-inch shuttle conveyors in about the same manner as Colonial Dock is operated. The location of this tipple makes the main difference between the two plants, it being located on the river bank, while the one at Colonial Dock is located directly over the river. This allowed us to build the foundations entirely on shore, eliminating a large amount of river work. It also kept the river free from any obstruction.

The ice-breakers were built pretty well in towards the river bank, a considerable piece of the bank being excavated and cast back on shore to make fill for a railroad yard. With the tipple located on shore, it became necessary to feed the coal out to the side of the tipple, and eight feeding belts are provided for this purpose. They take the coal from the bottom of the bin and deliver it to eight vertical spiral chutes. These chutes can be raised and lowered by means of electric hoists to suit the various stages of the river. A counterweight is provided on each of these chutes, which is sufficient to balance the weight of the chute itself and make the duty on the electric hoist very small when raising or lowering. The bottom of each of these spiral chutes is equipped with a hanging chute which can be raised and lowered in

order to deliver the coal to the extreme bottom of the barge. As soon as the barge is loaded out, it will be necessary to raise these bottom chutes in order to place an empty barge alongside the tipple for loading. Two barge movers are provided for shifting barges around the tipple, and all chute-operating mechanism, feeders, and barge movers are controlled from a central cabin by one operator. This cabin is located so that the operator can see all stages of the river operation. All feeding belts can be operated in unison or separately, as desired by the operator. The capacity of the feeders is such that a barge can easily be loaded in 10 minutes at any time this becomes desirable.

We expect this system to operate more economically than the one at Colonial Dock, but it takes time to prove this. This plant will probably not be in full operation before the spring of 1928.

From our experience with the Colonial Dock conveying system, we believe there is no question as to belt conveyors being a very economical means of transportation of coal over a long distance. In order to be economical, however, it is necessary that the tonnage be large. Any system to operate over four miles underground should have a capacity of not less than 8000 tons a day, and twice this amount would be better from the standpoint of economy. Any main-line conveyor should carry as nearly as possible the full load throughout the entire time it operates. Seventy-five per cent. of the operating cost goes on while belts are running idle, and a few more tons per hour on a belt cost practically nothing. An underground conveying system costs over twice as much to install as the total cost of all the equipment involved. Grading, heading protection, and drainage are expensive in an installation of this kind, and on a main-line conveyor it is not advisable to leave any question as to the stability of the roof. We believe a belt-conveyor system can be built on the surface, complete, for not over two-thirds of the cost required underground. This means that an outdoor system can be 1½ times as long as an underground system and still operate with the same economy. We do not believe that we have nearly reached the extreme length to which a system can be built and operated economically. In each of the two cases here treated, the length of the conveying system has been established wholly with reference to the distance the coal could be transported from the face by the necessary locomotives so as to get economy from the locomotive haul. We do not doubt that there will be much

longer conveying systems built in the future as it becomes necessary to move coal to the river from farther inland. River coal is not now necessarily located directly along a river.

Whenever a system of mining can be developed which will daily produce 5000 tons of coal from a small area and without a large amount of development headings, there is no question but that this tonnage can be transported by long main-line conveyors from just back of the face to the tipple outside at a decided saving over the handling of this coal by locomotives.

In workings which have already been developed for mining by present methods, it would be a very difficult matter to design any system, using belt conveyors for transportation of coal instead of mine wagons and locomotives. We believe, however, that where a new piece of coal is to be developed, it might be possible to design a successful conveyor installation for the handling of all the coal in the field. This would be an ideal mine. The coal would leave the working face with only one handling and be in motion from the time it was lifted from the floor until it arrived at the tipple. There would be no delays due to waiting for mine wagons, but all places would be cleaned up as fast as the coal could be handled after once being shot down. To develop such a mine, however, another new system of conveyors must be perfected. Up to the present time, only the main-line conveyor can be considered as satisfactorily developed. The feeding lines would have to be light and easily handled, and a much larger tonnage would have to come from each individual working section than has heretofore been accomplished or the conveying system would be so cumbersome as to defeat its own end. Even if such a scheme is not developed and perfected, there still remains a large field for the use of belt conveyors of the class already proved. There are undoubtedly large numbers of mines that could be advantageously consolidated, delivering their combined tonnages underground to a common point, where a large tonnage could be transported by belt conveyors to an outside loading point on either river or railroad. By such consolidations, large savings can be accomplished by doing away with the small hoisting and loading plants, allowing one crew of men to perform the work which has in the past been done by six or more crews. A dumping point such as the one provided for the Palmer Dock conveying system can be operated with less than half the men required

at the bottom of the Palmer shaft at present, where less than half the tonnage is being hoisted. This simply points out one of the economies to be effected, while many more are possible and can easily be seen on a little investigation.

The sinking of a slope from the surface of the ground to the coal seam is in most cases not sufficiently expensive to have any considerable influence on the final analysis of a scheme for consolidating mines, and it will probably be the policy of the future to bring the coal to the surface as near as possible to the concentration point selected underground, delivering it from this point overland to its final destination. This is on account of the fact that conveyors can be built much more cheaply on the surface than they can underground.

In both the consolidations we have made to date, the underground routes were pretty well provided and the topography of the country made it very difficult to find a direct overland route to the river. Wherever a route of this kind can be laid out, without extreme difficulty however, it would be advisable rather than adopting an underground route.

Regarding the design of a transportation system of this kind, our experience shows that it is safe to say that the system can be operated economically if its installation cost is not high enough to run the sinking fund charge above six cents a ton on the tonnage to be carried. By sinking fund, in this case, we mean simply the charge against the plant, which would return the money expended at the end of the estimated life of the plant. This, of course, depends on the system being so designed as to stand up well under operating conditions so that repairs and maintenance are not overly high. Belts can be expected to carry anywhere from 8,000,000 to 10,000,000 tons, and all other machinery in connection with the conveyors should be readily kept up for at least 20 years without any very high replacement costs. The main renewals required are chutes, belts, and carrier bearings. The labor cost will be low and accidents held down to a minimum.

While the conveyors here described are not small, it is believed that belt-conveyor transportation of coal has really just started.

MINE LOCOMOTIVES FOR GATHERING AND MAIN-LINE HAULAGE*

By G. H. Shapter†

A general paper on the subject of electric mine locomotives would hardly seem complete without a reference to the early pioneer types and hence even though this topic may be more or less familiar to most of you, a brief paragraph or so may be of passing interest to others.

So far as the writer is able to learn, the first electric locomotive ever built and placed in service hauling coal underground was com-

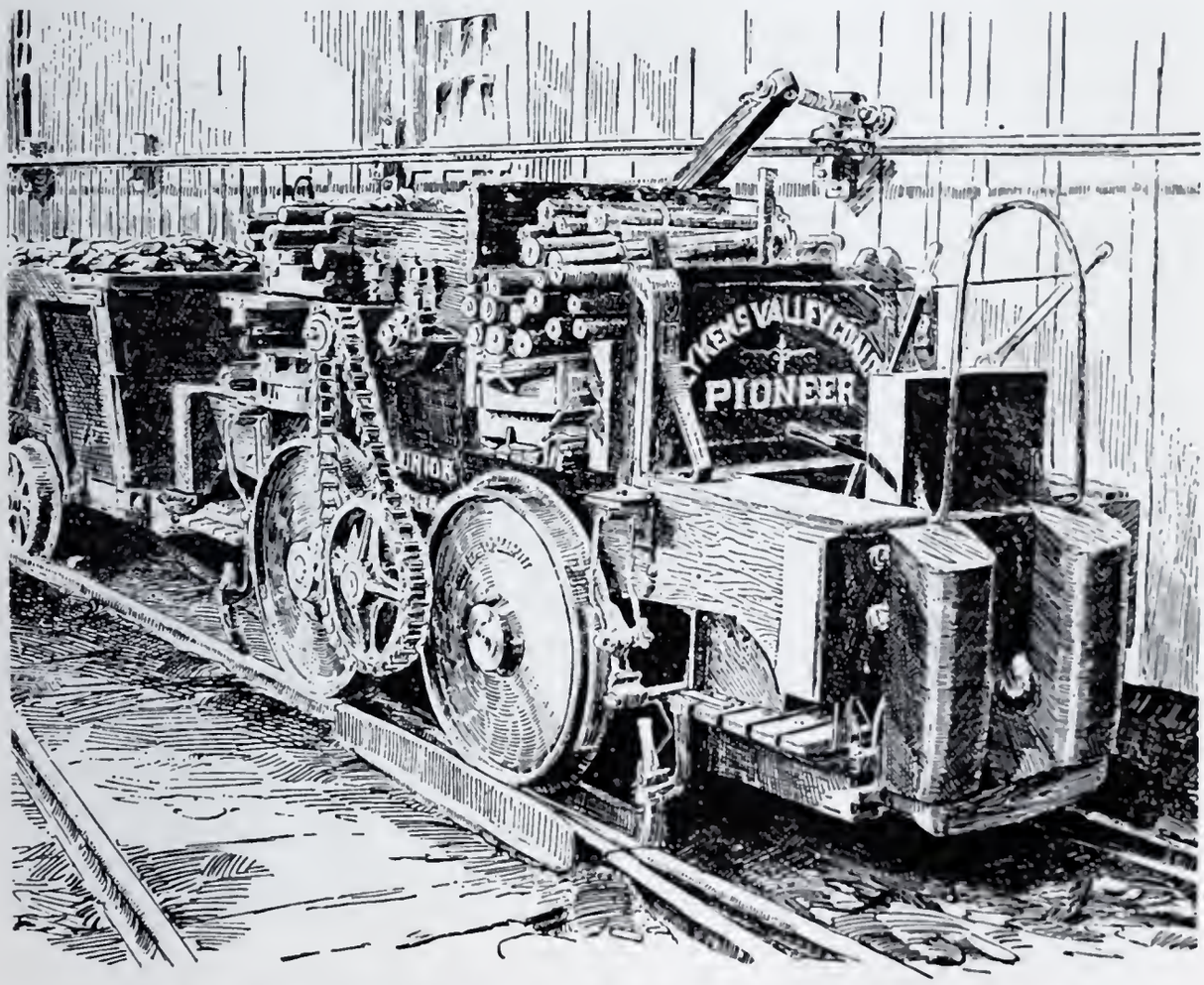

Fig. 1. First Electric Mine Locomotive Built in United States.

pleted 40 years ago, in 1887. This was a few years previous to the advent of the first electric street-railway system. This particular locomotive was built for the Lykens Valley Colliery of the Pennsylvania Railroad (Fig. 1). It was driven by the only type of dynamo

*Presented at Mining Conference, October 20, 1927. Received for publication March 6, 1928.

†General Electric Co., Erie, Pa.

then available, namely an Edison bi-polar motor with a rating of approximately 40 horse-power which was connected to the driving axles by a chain-and-sprocket drive. The frame was made of heavy timbers and apparently it was necessary to add additional weight in the form of scrap-iron and other material. The metal brush bearing on the track rail evidently completed the electric circuit from the trolley wire through the motor to a grounded rail return.

This pioneer was superseded two years later, in 1889, by a machine of similar appearance (Fig. 2) in which the chain-drive was

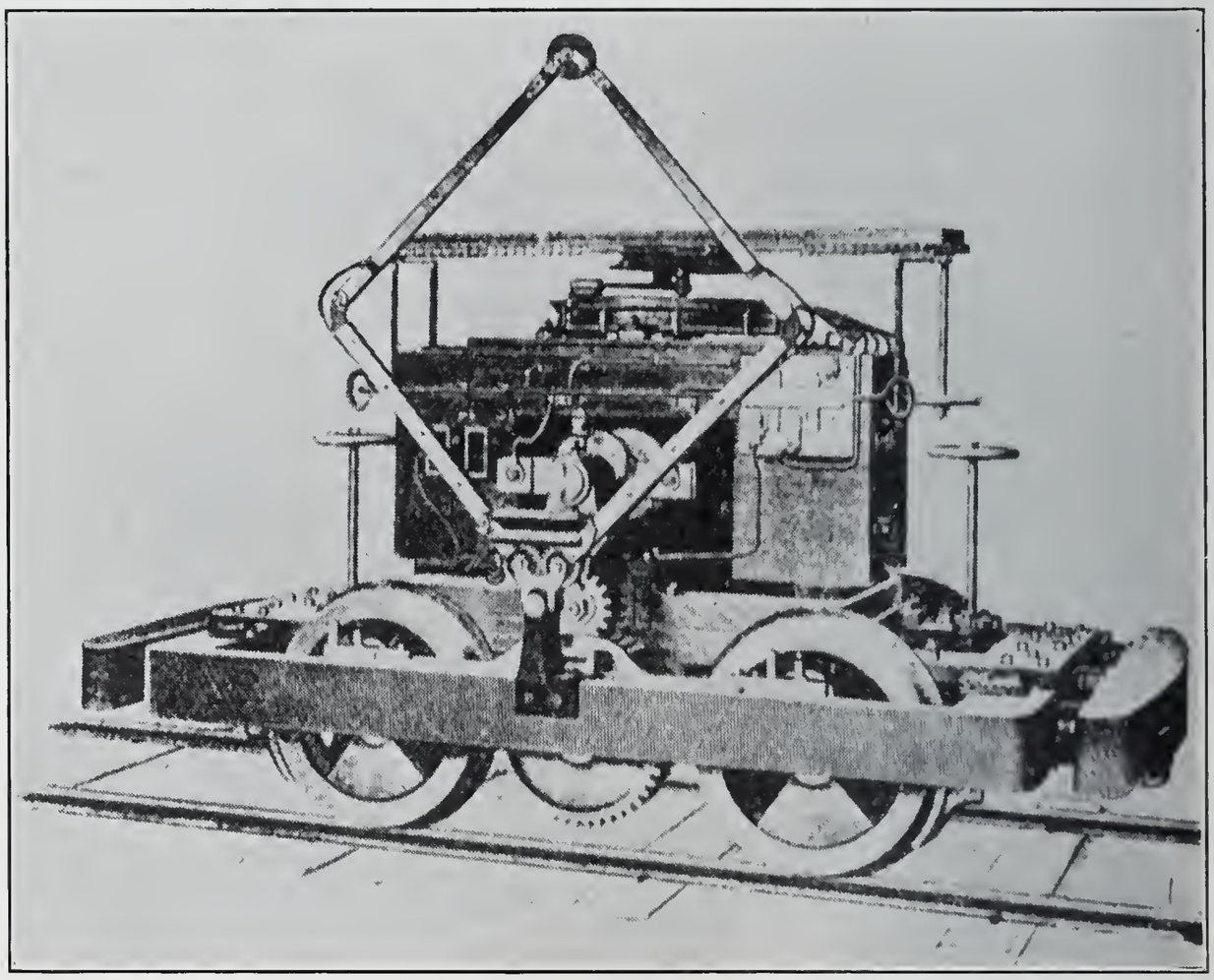

Fig. 2. Early Mine Locomotive.

replaced by a spur-gear train coupled to a Scotch yoke, and the wood side-frames were replaced by cast-iron and the addition of a spring bumper. At that time the controller of the revolving-drum type was wholly unknown and these early locomotives were controlled by a sliding contact operating through a sprocket chain and a hand-wheel. This mechanism was located at the top of the motor frame. This machine weighed about 7500 pounds and was equipped with a so-

called 40 horse-power motor, but the basis of this horse-power rating is not known. It is at least evident that the horse-power motor capacity per ton of locomotive weight at that time agreed somewhat closely with present-day practice. This locomotive was built for the Hillside Coal & Iron Company, Scranton, Pa.

The third one of the earlier types, called the "terrapin back," was constructed with cast-iron side-frames and end frames and driven by a bi-polar motor with side-rod connections to the axle. This machine was built and installed in 1891 and, according to reports, is still in service. Others of the same type are still operating. A complete factory line of these machines was listed in 1892 ranging in size from 1¾ to 11 tons and equipped with motor capacities from 15 to 150 horse-power. For each weight of locomotive there were designs to give speeds of either 6 or 10 miles per hour at tractive effort ratings corresponding to an adhesion factor of 20 per cent. of the total weight of the locomotive. An available record of one of these "terrapin back" locomotives cites that on December 14, 1891, it performed the following haulage service:

"Distance round trip 1 mile, cars per trip 19, weight empty cars 1200 lbs., 30 trips per day, miles per day—30, running time 5 hours, waiting for coal, empties, etc., 3¾ hours, total tons of coal hauled 784, track profile in part 4½% favor of loaded trains, about one-half distance level."

Along about 1895 the immediate predecessor of the modern locomotive came into existence with a two-motor drive by a single spur-gear reduction to each axle, leaf-spring suspension, and cast-iron side-frames and end frames (Fig. 3). The published list of sizes shows weights of 1½ tons, 3¾ tons and 6¼ tons, with capacities of about 12 horse-power per ton and speeds of 6 and 10 miles per hour.

In 1904 the United States Bureau of Mines reported a total of 675 electric locomotives in Pennsylvania, as compared with the present estimate (1927) of 4500 locomotives in the bituminous mines of the state. The estimated total number of mining locomotives operating in soft-coal mines of the United States is approximately 16,000. There still remain probably 36,000 animals, which might possibly be replaced in the ratio of five animals to one locomotive, thereby indicating an additional probable requirement for locomotives of some 7200.

It is estimated that the total number of locomotives in the anthracite field is approximately 3500, these handling 60 per cent. of the

total anthracite output. The anthracite haulage requirements could be taken care of by a total of 5800 locomotives. The total number of locomotives in service in both the anthracite and bituminous fields is between 19,000 and 20,000 machines. The total locomotive installation possible for the present mine output appears to be in the neigh-

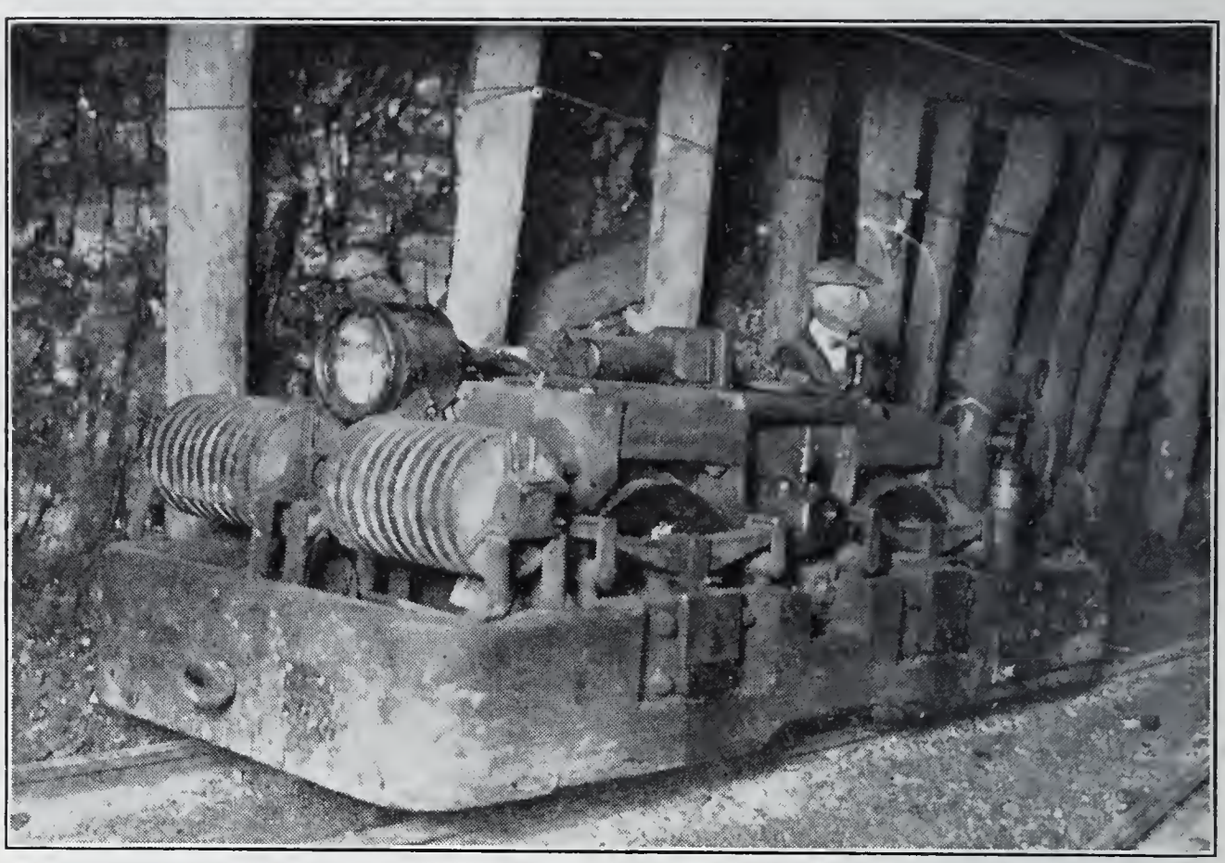

Fig. 3. "Terrapin Back" Locomotive.

borhood of 29,000 locomotives. The number at present in service represents 68 per cent. of saturation.

All mine transportation may be divided into two main classes—gathering and main-line haul. There is a third class more or less common in mines of small output where the gathering locomotives are used as such and also to haul coal from the face to the tipple, the haulage distance being relatively short.

Gathering locomotives may be divided into three types—the trolley, cable-reel; the straight storage battery; and the combination battery and trolley. By far the most common type is the trolley, cable-reel locomotive. In the past 12 years the storage-battery gathering locomotive has taken its place alongside the cable-reel machine as a worthy competitor, as evidenced by the fact that the average of

locomotive sales on battery locomotives for gathering work during the past few years has been approximately 25 per cent. of the total.

The application of locomotives to gathering service was in a large measure responsible for the adoption of heavier cars, and heavier and better laid track rails, as the size of the car had previously been determined by the ability of the miner to push it to and from the face. With the advent of the locomotive it soon became apparent that better economy would result if more tonnage per car were pulled each time the locomotive went to the face, as the locomotive was found able to pull these heavier cars even on heavier grades. The larger car was a natural economic result in order to make the investment for the locomotive pay its proper return. It is not uncommon now to encounter cars which hold as much as five or six tons of coal.

The gathering locomotive easily enabled the operator to mine in sections which, due to local dips and grades, were previously considered unprofitable; so now we find gathering locomotives of various kinds operating in sections where the grades frequently vary as much as six or eight per cent., occasionally up to 15 or 16 per cent., and in rare instances 20 per cent. or more. In the latter case, a sanded wooden plank is used in order to keep the locomotive from slipping.

The gradual extension of the use of gathering locomotives into all kinds of conditions has brought about the need for a rugged, powerful machine able to start, stop, and move about freely with the least amount of effort and with the greatest degree of safety for the operator. The modern machines (Fig. 4) have in most of the designs the following essential characteristics:

Two motors each driving one axle, both controlled by the familiar form of progressive series-parallel controller or the selective series and parallel controller (in some instances the contactor group operated by a master controller), 10 horse-power per ton of locomotive weight, an operating speed from six to seven miles per hour at rated draw-bar pull, steel side-frames (either cast or made from rolled plate), cast-steel end frames, steel-tired wheels, cable reels of floating motor type or mechanical drive, and a reliable storage battery in case of this type of locomotive.

This modern machine will gather and place on the parting from 100 to 150 loaded cars a day, placing all empties at the face and pulling all loads therefrom, collecting such cars in the entry and

placing the trip on the parting, say at an average distance of 2000 feet from the farthest working room in the entry. If we assume that the average car in use will hold 3½ tons of coal, the capacity of the average present-day gathering locomotive is between 350 and 500 tons of coal daily. During the gathering operation, the locomotive travels a distance of approximately 25 miles in eight hours elapsed

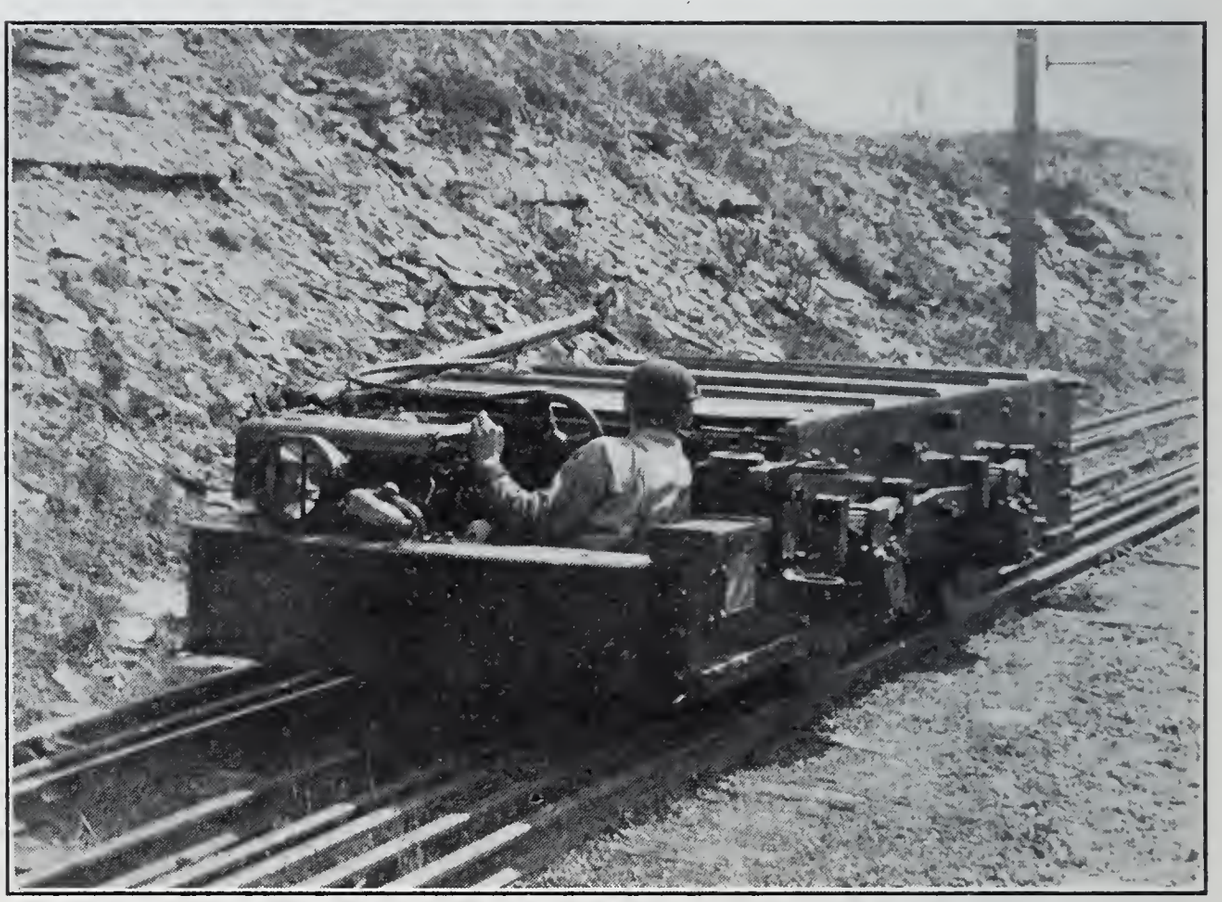

Fig. 4. Modern Electric Locomotive.

time, or at a schedule of 2.5 to 3.1 miles per hour under loads and conditions calling for maximum at the slipping point of the wheels to zero load on the motors.

Due to the inherent speed characteristics of the series motor, a mining locomotive when running without a trailing load on level track will attain a maximum speed of between 12 and 15 miles per hour, and with one car loaded or empty in a level room its speed can be as high as 10 or 12 miles. It has thus become apparent that the heretofore recognized standard speed of seven miles per hour for gathering locomotives at full draw-bar rating may not be utilized at all times, and this has brought about the introduction of low-speed

gathering locomotives operating at a rated speed of between 3.5 and 5 miles per hour.

It is a fact based on fundamental physical laws that the power of the locomotive equipment depends directly upon the locomotive speed for a given draw-bar pull; that is, a locomotive pulling 10 cars on the level at a speed of seven miles per hour must develop twice as much power as if it were pulling the same 10 cars at a speed of 3.5 miles per hour. It is therefore obvious that in the case of a cable-reel locomotive the current passing through the cable conductor at three miles per hour is one-half of what it would be at seven miles per hour. The controllers and rheostats handle just half the current and consequently it is reasonable to expect less maintenance on these parts.

With a given trolley wire, a given system of rail bonding, and a given distance from the source of generator supply, there must be one-half as great a drop in the voltage of the distributing system as there would be for the locomotive running at twice the speed; so the low-speed locomotive might have a better chance to perform satisfactorily under a poor distribution system. During 12 or more years past, the storage-battery gathering locomotives have been almost universally designed for a speed of 3.5 miles per hour at rated draw-bar pull, and these locomotives have in numerous cases demonstrated their ability to gather as many cars as the conventional high-speed trolley locomotives, which might seem sufficient proof that the trolley locomotive could be lowered in speed with prospect of material benefit therefrom.

With trolley locomotives it is the customary practice to operate them with multiple-connected motors on the first one or two notches of the controller (or at least on resistance notches) when entering or leaving a room, primarily on account of the reel, the poor tracks in these rooms, and the hazard in approaching or leaving the face at high speeds. Likewise, when passing from one room entry to another along the entry, the trolley locomotive operates at low speed, being held down by resistance in the motor circuits. Since the gathering locomotive is working the greater part of the time inside the rooms it is working uneconomically as regards power consumption, the excess power being lost in the locomotive resistance units. If the low-speed locomotive could be substituted in these places it would be possible for the operator to run the locomotive at full terminal voltage with

the controller handle full on, thereby eliminating the wasteful rheostat losses, and at the same time probably maintaining an average speed equal to that obtained by the high-speed gathering locomotive.

A number of independent tests have been made comparing the performance of low-speed locomotives with the standard-speed locomotives, and these tests seem to prove that the power saving is in the neighbohood of 30 to 40 per cent. in favor of the low-speed locomotive.

The storage-battery gathering locomotive (Fig. 5) has been successfully used in many mining territories, there being a total of about

Fig. 5. Combination Storage-Battery Locomotive.

2600 in service in all parts of the United States. Of this number there are approximately 800 in the mines of Pennsylvania, probably 300 of which are in the anthracite district.

This form of gathering locomotive is greatly favored because it needs neither trolley wire nor bonding of rails—without the installation of wires, it can go into any room where a car can be placed. Consequently, when the district is worked out, the wires do not have to be removed and erected in another place. The storage-battery locomotive has frequently proved that it can gather as much coal in a working day as the trolley, cable-reel locomotive. There are, of course, operating conditions which might not be suitable for the storage-

battery locomotive, but when it is properly applied to the service conditions it does very satisfactory work.

The main drawback has always been, and probably always will be, a lack of sufficient battery capacity to finish up a day's work. The battery may be so proportioned as to capacity to do the amount of work that might be specified by the customer, but it usually happens that when once installed the machine does do this work and proves capable of doing still more work. Naturally, then, the operating force desires to extend its range of operation at a time when the locomotive has already worked out its complete battery capacity. The result is that the operator comes to the conclusion that the batteries furnished were not big enough for the locomotive. This condition is being rapidly overcome by the manufacturers of locomotives, who, in making their calculations, allow for liberal excess battery capacity over and above that specified by the customer. It is becoming a fixed rule to place as much battery capacity on the locomotive as the space limitations will permit. The battery is undeniably a reliable device for storing electric power, and it will deliver this power day after day with surprisingly few failures of the battery itself.

The storage-battery locomotive can not be applied as a replacement locomotive for cable-reel installations without a clear and proper analysis of the operating conditions, nor can it be applied generally in preference to trolley, cable-reel machines unless the facts concerning the conditions of service are fully known beforehand and observed after installation. Otherwise, the battery locomotive is likely to be misapplied, and thus unfavorably considered by those operators who did not give due consideration to its limitations before they purchased and installed this form of locomotive.

The combination storage-battery and trolley locomotive has been developed in various forms—some with small batteries intended merely for operating the locomotive in the room in a manner similar to that of the cable reel on a trolley, cable-reel locomotive; others with larger batteries for room and entry work; and still others for a moderate degree of haulage in addition to the room gathering work. In most cases with the combination locomotives the principle of charging the battery from the trolley circuit is incorporated.

The storage-battery gathering locomotive is the only type which has received the approval of the United States Bureau of Mines for

use in gaseous mines. A number of these were developed by the various locomotive manufacturers, all of which ultimately passed the Bureau's tests for permissibility under Schedule 15. The sale of this kind of locomotive has not been very rapid, there probably being no more than 35 or 40 in operation. The company which I represent has supplied an approximate total of 15 locomotives similar to that illustrated in Fig. 6.

These, aside from the ordinary features of the "permissible" motor equipment, utilize a contactor control (Fig. 7) housed in a cylindrical

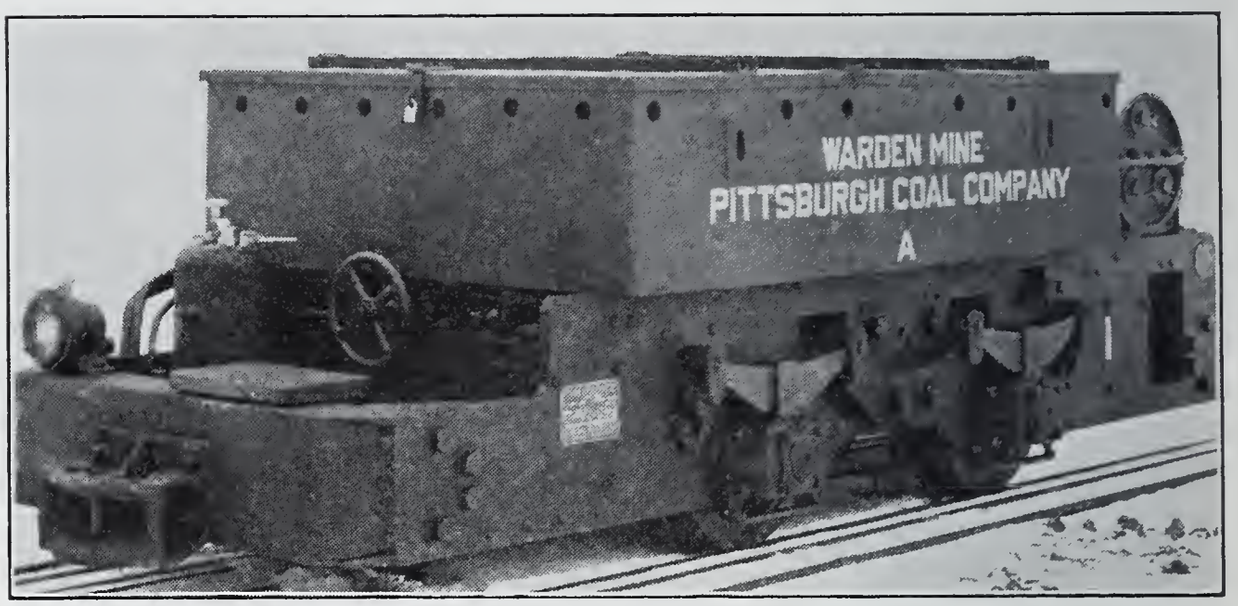

Fig. 6. Storage-Battery Gathering Locomotive.

"permissible" compartment as shown in Fig. 8, the contactors being operated from a master controller (Fig. 9). The idea of this scheme was to remove the ordinary wear and tear from the controller itself and place the burden of making and interrupting the contact on a group of solenoid-operated contactors. Since a "permissible" equipment is naturally more inaccessible than the standard equipment, it was thought desirable to furnish operating parts which would not need such frequent inspection. The actual results obtained from this equipment have proved the wisdom of designing the control apparatus in this manner.

There is one other very recent form of gathering locomotive which we call "sealed equipment, trolley, cable-reel gathering locomotive" (Fig. 10) in the absence of a better name and in the absence of approval for permissibility in gaseous mines. This consists of the

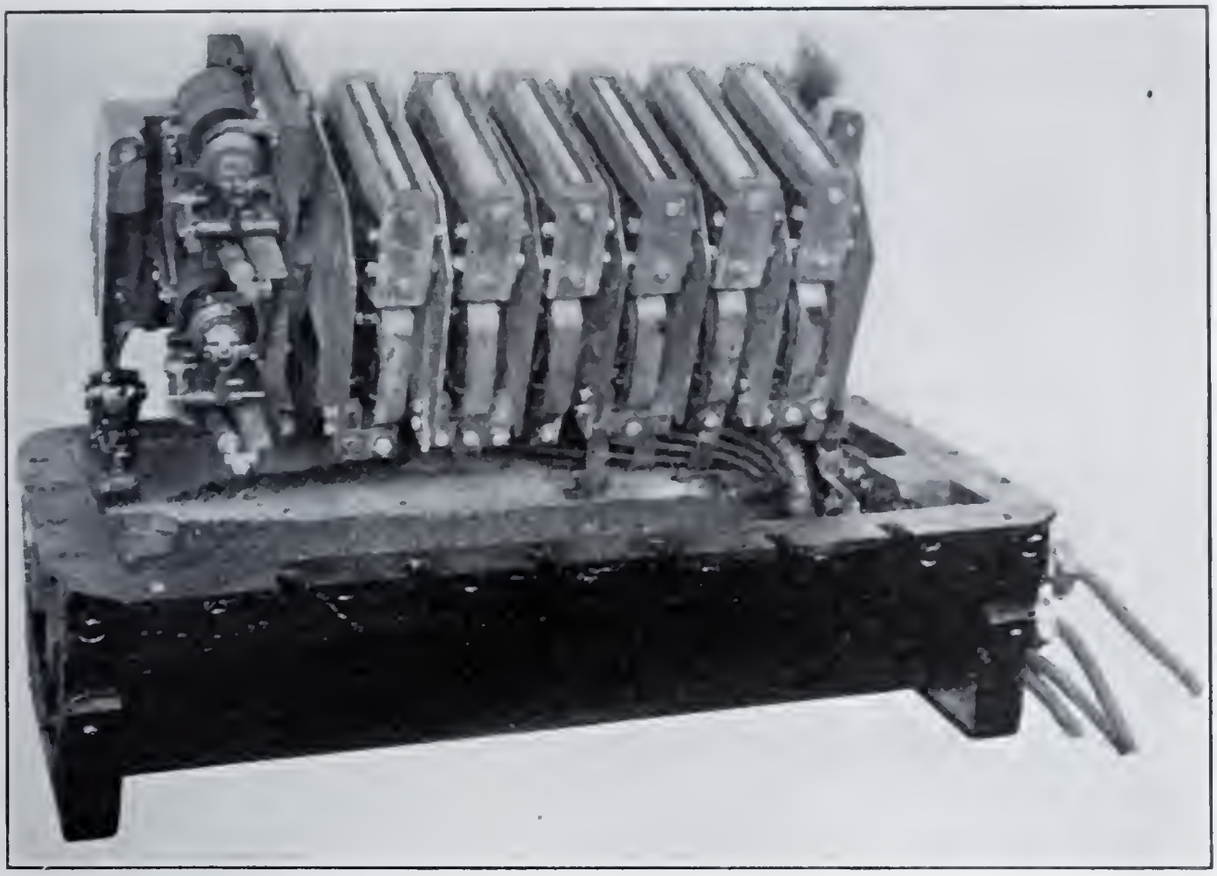

Fig. 7. Contactor Control.

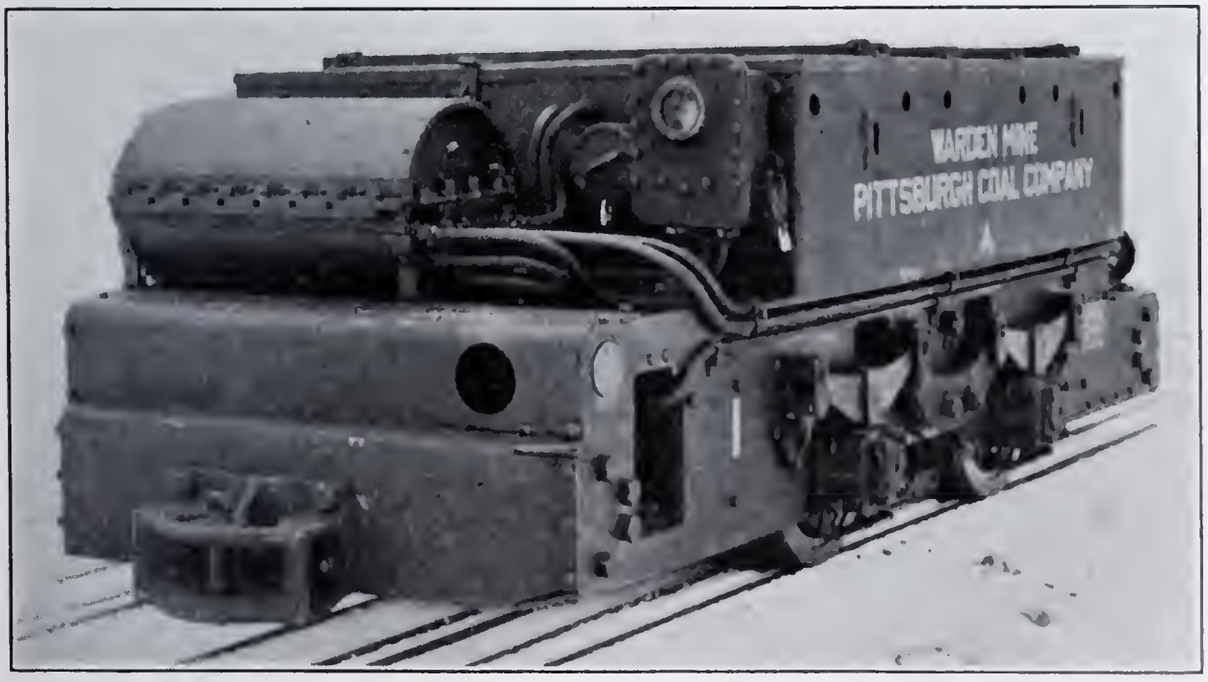

Fig. 8. Electric Locomotive, Showing Housing over Controller.

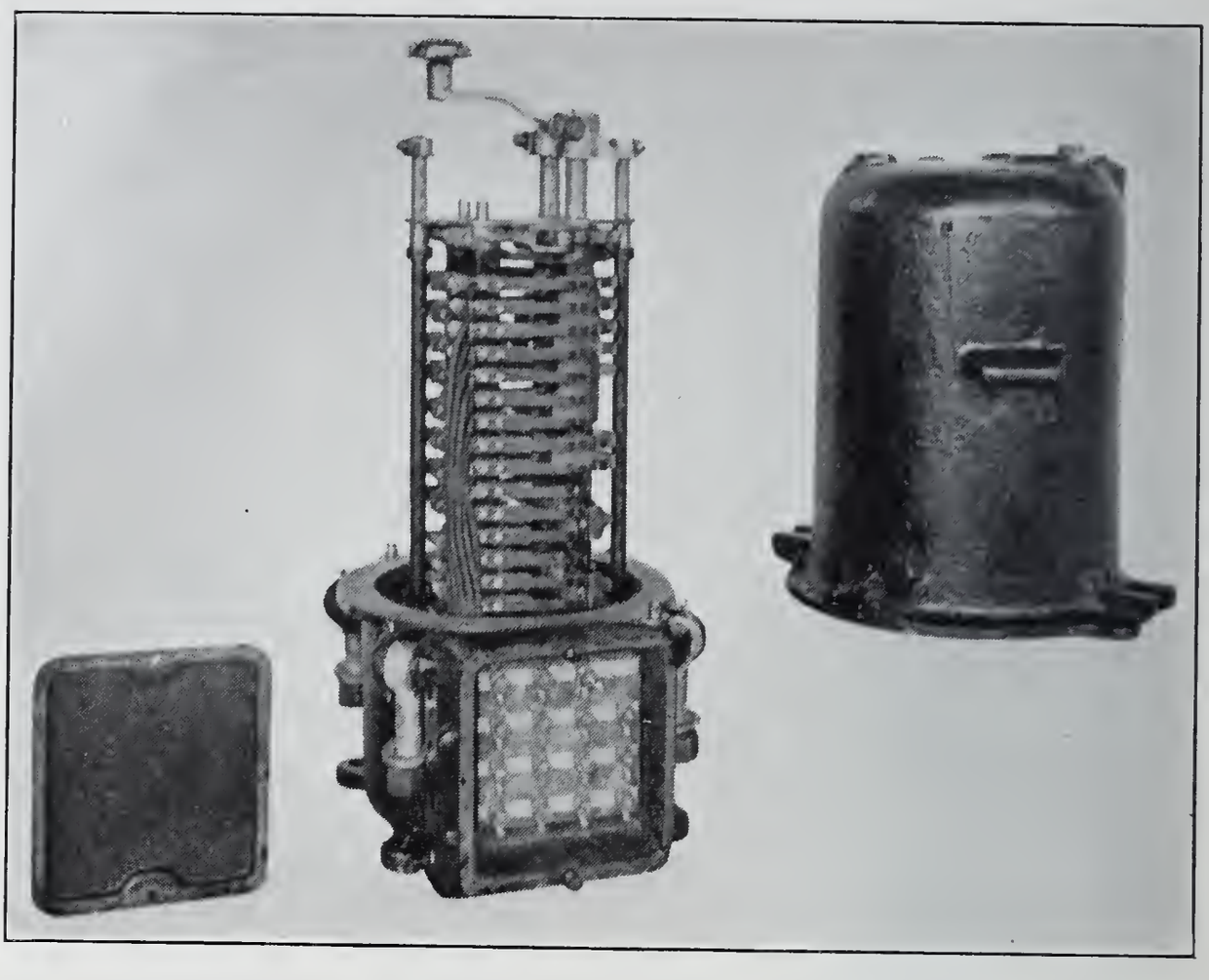

Fig. 9. Controller.

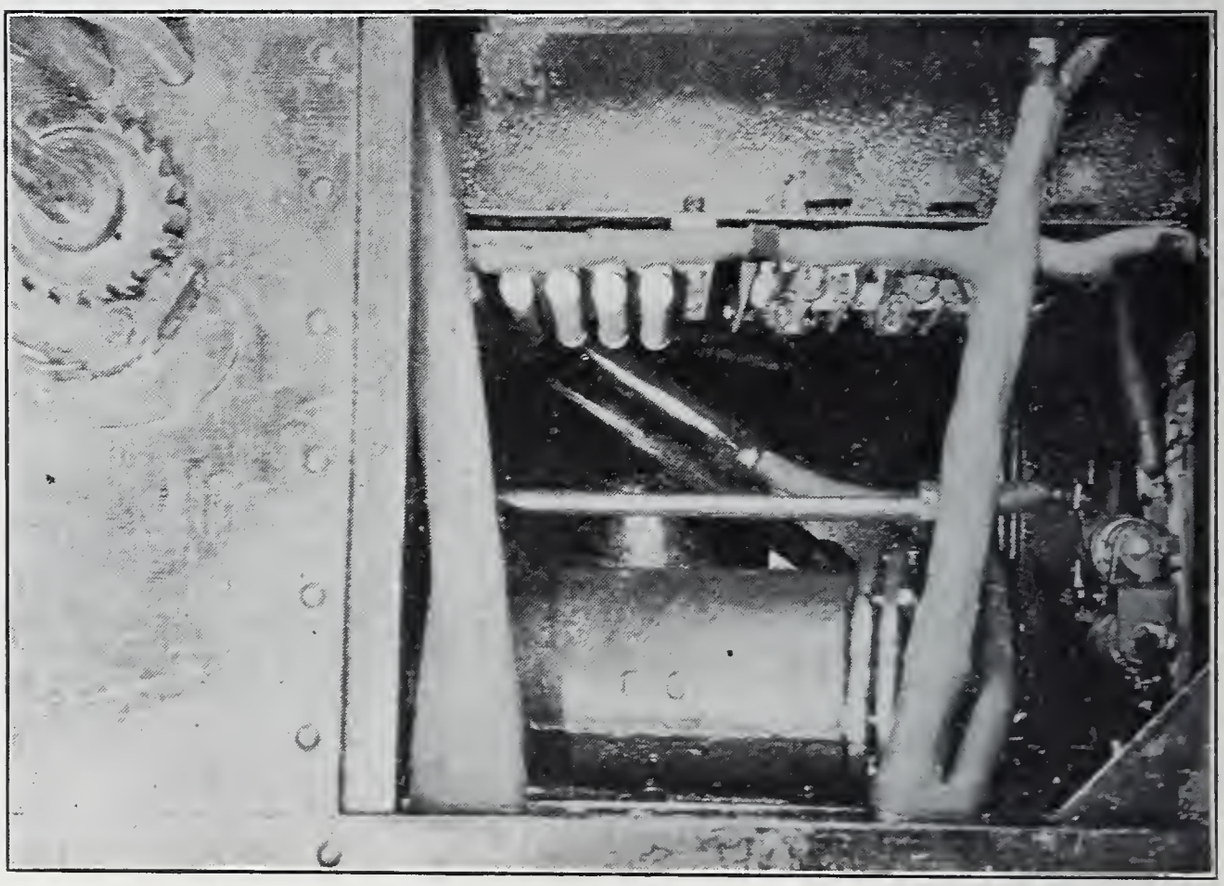

Fig. 10. "Sealed Equipment" Locomotive.

essential parts of a trolley, cable-reel locomotive with the additional features of "permissible" operating equipment, such as motors, controller, rheostats, fuse boxes, headlights, etc., similar to those approved by the United States Bureau of Mines on "permissible" storage-battery locomotives. The Bureau does not rank this locomotive as "permissible," but it has been developed on account of the demand of the operating people. This locomotive has been built and installed in one of the mines in this district. It is the first of an order for several, and all electrical parts have been tested and have successfully withstood the same tests as are applied to the "permissible" battery locomotive parts. The locomotive operates in the usual way of a cable-reel gathering locomotive, is equipped with a double conductor cable, a

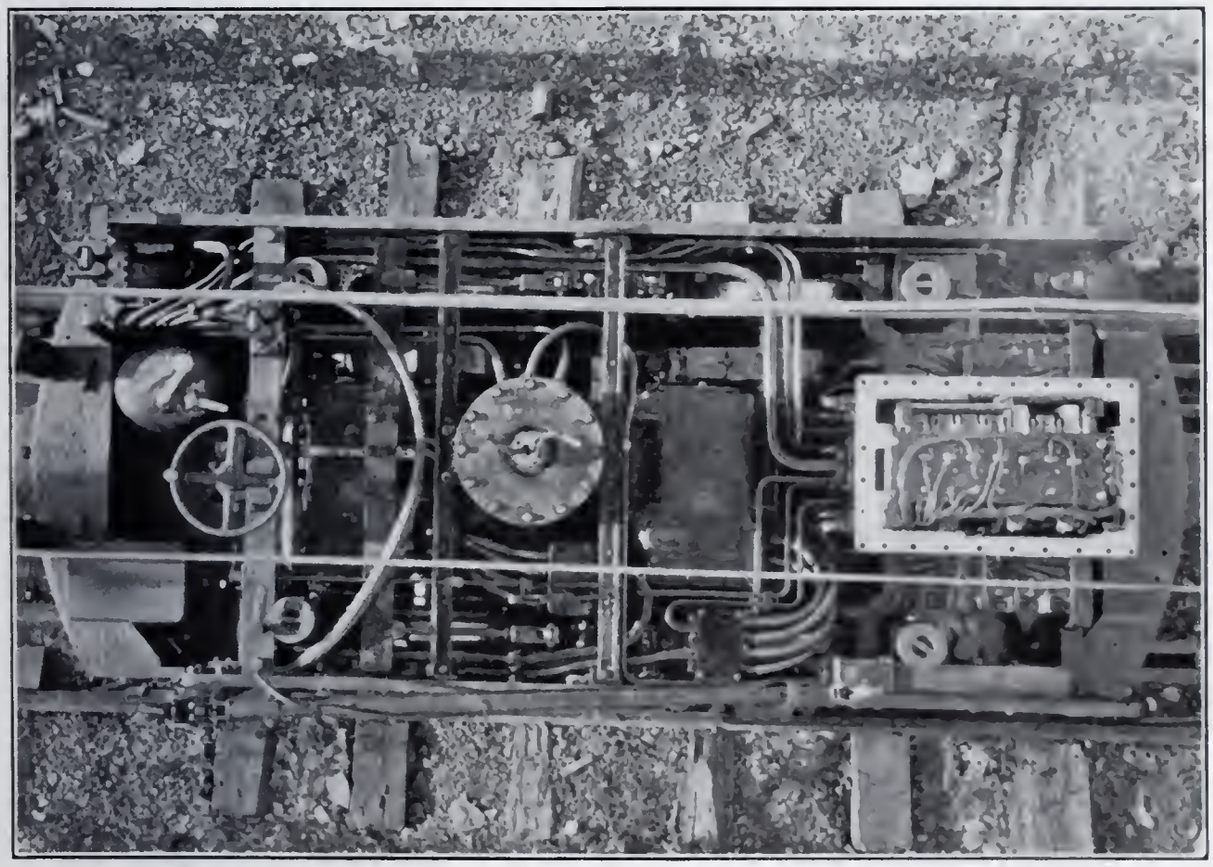

Fig. 11. Special Cable-Reel Motor.

special cable-reel motor (Fig. 11) and control (Fig. 12) and is of the contactor type (Fig. 13), making motor connections in the progressive series-parallel manner by a master controller (Fig. 14). The load speed—five miles per hour—is slightly lower than that of the previous standard gathering locomotive. When this locomotive enters a room for gathering or delivering the cars it does so on the power received

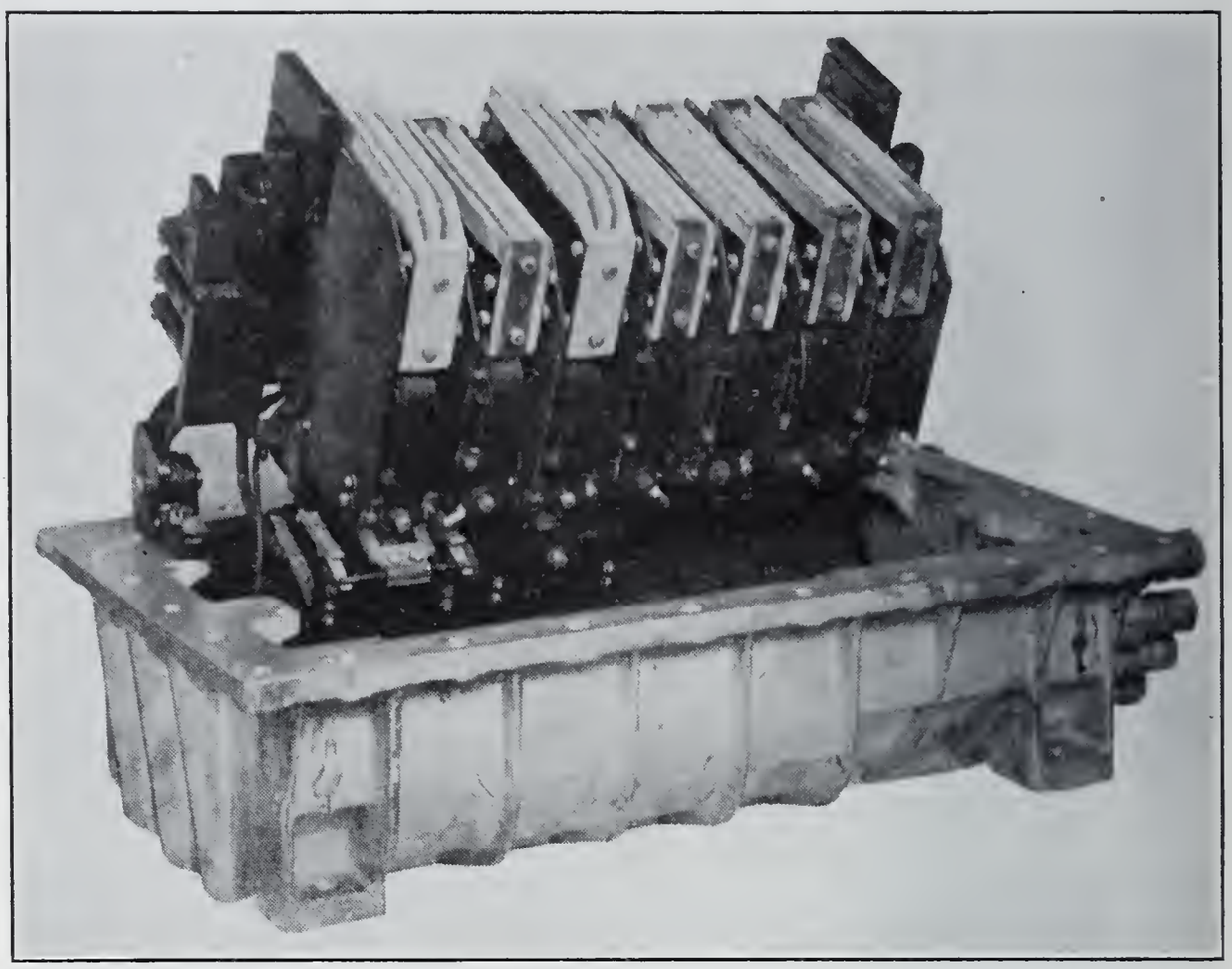

Fig. 12. Control Group.

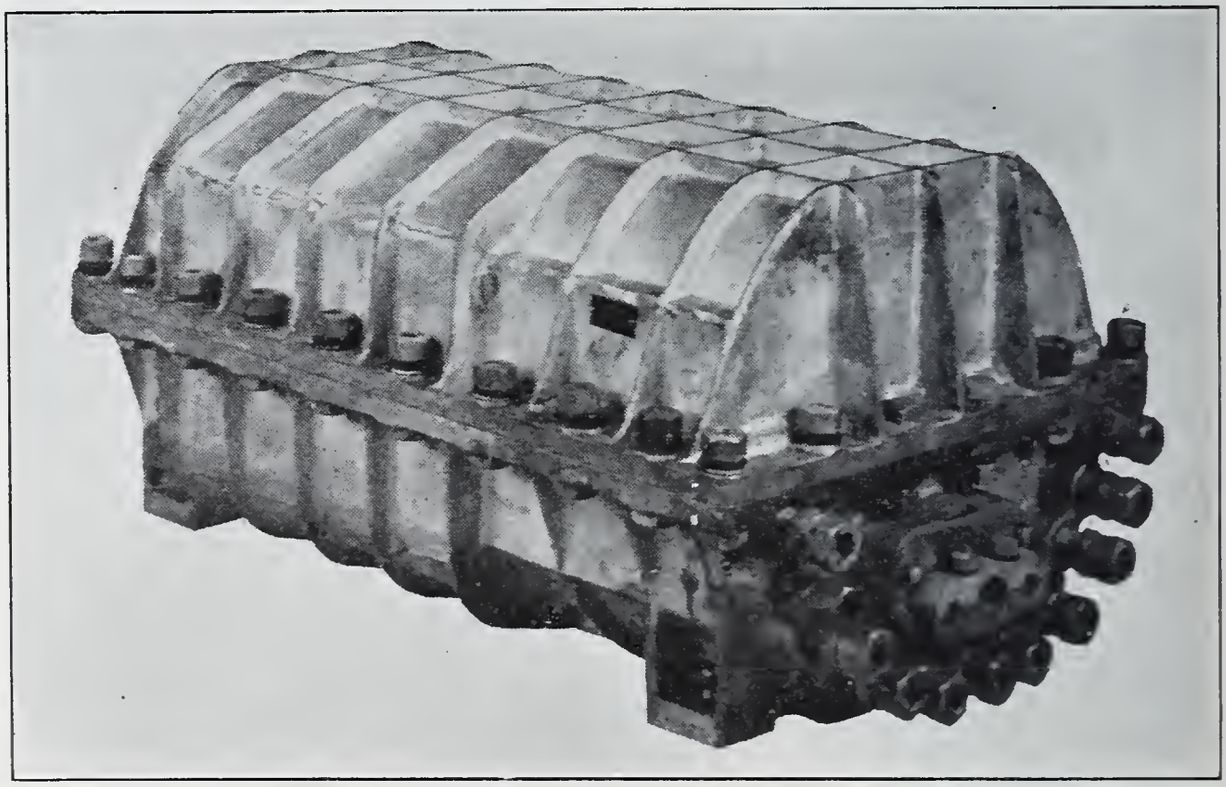

Fig. 13. Control Group.

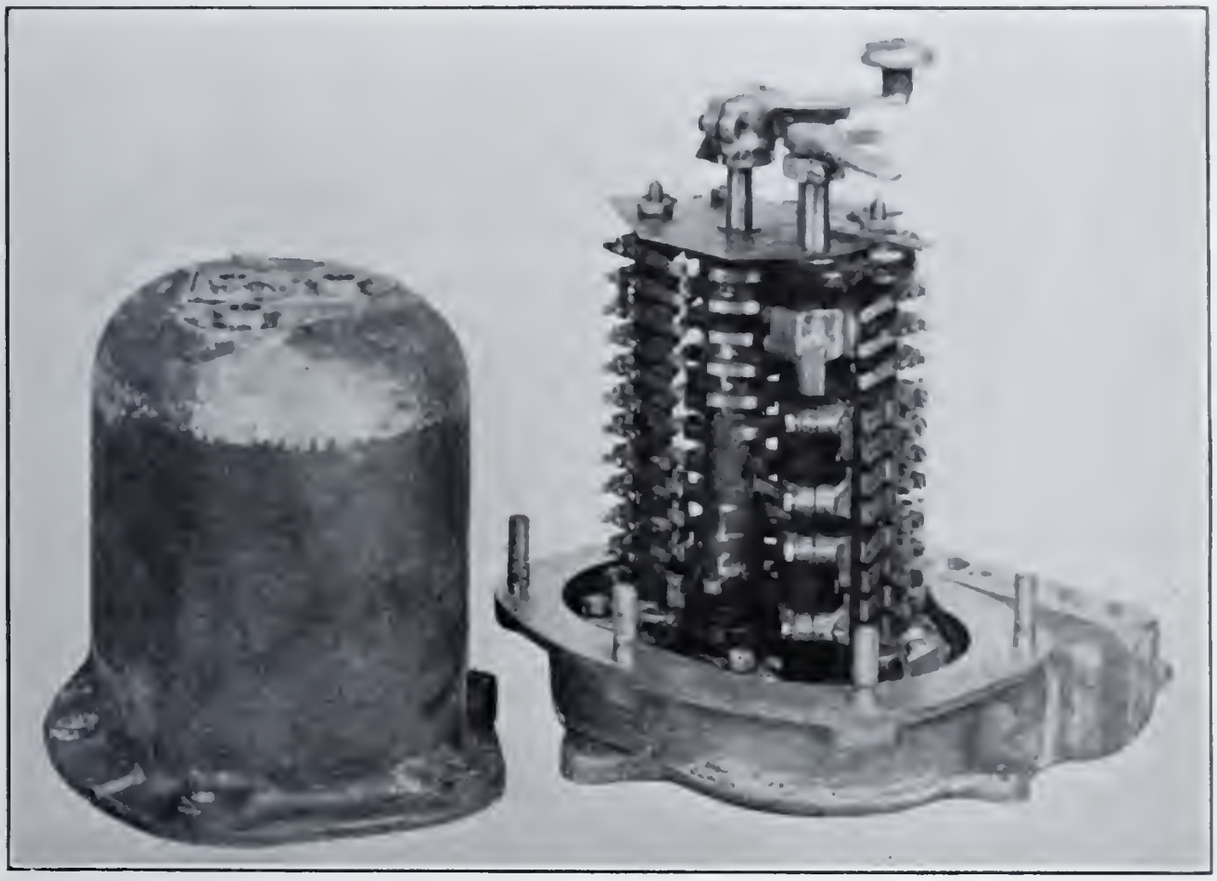

Fig. 14. Master Controller.

through the cable reel and at a speed limited to one-half of its normal speed. It is expected that, with this compulsory regulation, the speed of the locomotive will be sufficiently low to prevent running over the cable, which is the thing mostly to be feared when operating this machine in a gaseous room.

The second class of underground locomotive is represented by the main-haulage locomotive. The underground conditions in most coal-mines are changing from year to year, and coal is now being mined in sections heretofore unprofitable to mine due to location and grade conditions. The operators are being compelled to get this coal now, even though some of it has to be hauled a distance of 3½ to 5 miles from the face to the shaft or drift mouth. The haulage locomotives are thus from year to year being put up against harder duty with a consequent greater percentage of motor burn outs. It was the standard rule ten years ago to consider 12 horse-power per ton of locomotive weight as the proper motor equipment for haulage locomotives. The accompanying curve illustrates the horse-power capacities in locomotives from 1908 to the present time and it will be seen that there is

a gradual increase in the requirement for greater motor capacity. The increase in operating speed has not been very great.

In the early days the above rule of thumb may have been good enough for most of the haulage locomotive equipments, but we are rapidly approaching the time when this rule can not be followed. The haulage locomotive is no better than the motors which drive it, and these must be of sufficient capacity for continuous operation to perform increasingly longer hauls and handle increasing loads. In order to protect the equipment from continual breakdown due to overheating of the motors it seems that we are reaching the time when motor capacities must be increased from 25 to 50 per cent. There are two ways of accomplishing this—one by increasing the size and weight of the totally inclosed motors now used, and the other by adding blower equipment to the present motor.

The first method is next to impossible because the motors of existing haulage locomotives represent a probable average of 30 to 35 per cent. of the total weight of the locomotive. Any increase in horsepower using inclosed motors will necessarily increase the weight of motors almost in direct proportion to the increase in motor capacity.

The second method gives promise of increasing the motor capacities without any material increase in locomotive weight. The addition of blowers to haulage locomotives is without question the cheapest way of raising the motor capacities sufficiently to meet modern requirements. For a few hundred dollars added to the cost of the machine the serviceability of the motors can be increased to almost double what they are capable of now. The additional equipment, of course, requires additional space should this feature be included as a part of the desired equipment.

DISCUSSION

Graham Bright:* I think there is plenty of material to start a real discussion. I was particularly interested in Mr. Shafter's mention of the ventilated motor. I feel like a pioneer in regard to the ventilated mine motor, for in 1915 I tried out a ventilation scheme on a large 35-ton locomotive. When that was first put in the Berwind-White coal-mine at Windber, Pa., it was the largest single locomotive ever put

*Sales Engineer, Mine Safety Appliances Co., Pittsburgh.

in a coal-mine. They would have preferred to haul 100-car trips, but, owing to the limiting capacity of the motors due to heating, 70 was all they could handle and with such a load the motors were ready to fry eggs on at the end of the day. It was nearly a year before anything was done to increase the capacity. At that time I was working not only on mine locomotives, but also on main-line locomotives. Most main-line locomotives ventilated the motor and we thought we might try it on the mine locomotive. We put a motor on the test block and tried it and we found that we got practically double the rating by blowing some air through the motor. We put this scheme into effect on the Berwind-White motor and immediately they put on 100-car trips and operated day after day with motors very much cooler than they formerly were at the end of the day with 70-car trips. They are still handling the same 100-car trips up there, and have been ever since 1915.

A. B. Kiser:* You have just heard read two very interesting papers by two engineers as to how locomotives are built by their respective companies. This opens up the discussion and gives those who operate and maintain locomotives an opportunity to express their views.

Considerable has been said about contactor control. Several years ago our company was under the necessity of purchasing two 25-ton locomotives. With three 125-horse-power motors in each locomotive and operating on 600 volts exclusively, we did not consider it advisable to use drum control. At that time magnetic control had not been developed to the point it has reached to-day, so a controller was selected in which mechanically operated contactors are used. This arrangement was superior to anything we had employed in drum controllers, its weakness being in the mechanical rather than the electrical parts. It demonstrated, however, the superiority of contactors over drum control. Such an arrangement, however, required considerable space for its accommodation. The rapid development of contactors for railway work provided a satisfactory control for mine locomotives. A little less than three years ago it was decided to purchase eight "permissible" storage-battery locomotives and an equal number of cable-reel locomotives, all equipped with semi-magnetic control.

*General Superintendent of Electrical Equipment, Pittsburgh Coal Co., Pittsburgh.

From the experience gained in the operation of these locomotives, all locomotives purchased since (with the exception of two required on short notice) were equipped with semi-magnetic control. Four 13-ton, one 25-ton, and 20 eight-ton cable-reel locomotives have been purchased this year, all equipped with series-parallel, semi-magnetic control.

Magnetic control results in cheaper maintenance, is more reliable, and much safer for the operator. It results in the saving of power, and its use is almost imperative in the operation of automatic substations where many locomotives are in use.

Relays protect equipment from excessive overloads and require the motorman to return the control handle to the "off" position when the power fails. Motormen, in consequence, must shut off the control in passing over "insulated sections," or when the wheel jumps off the wire.

I believe that the use of contactor control will eventually be furnished as standard locomotive equipment.

Locomotives should be provided with cast-steel end frames and heavier attachments to side-frames. The use of larger cars makes this particularly necessary for gathering locomotives.

If you have a variety of mine-track gages, have the locomotives built on a chassis suitable for the widest gage. All our locomotives are built on a chassis for a 44-inch gage. This permits their easy conversion to narrower gages.

We have found locomotives with outside frames preferable to those with wheels outside the frame.

No split gears are used. All axles are rewheeled at the shops and provided with solid gears. The gears and wheels are bored to fit each particular axle and applied without the use of keys. The hydraulic press is provided with a gage which makes a graphic record of pressure at which each wheel or gear is applied. These records are marked and filed for reference purposes.

Roller-bearings similar to the "S. K. F." double-radius type are superior to ball-bearings even when the latter are adequately sealed. Eight duplicate locomotives were purchased two years ago, some of which were equipped with ball-bearings and others with roller-bearings. It has been necessary to remove the ball-bearings and replace them. No roller-bearings have failed. We are now changing a 20-ton,

six-wheel locomotive to roller-bearings and contemplate changing two similar 25-ton locomotives.

Cable-reel locomotives provided with flame-proof compartments can not be called "permissible," as the United States Bureau of Mines has not granted an "approval plate" for equipment of this character. The different compartments, however, are submitted to the Bureau for explosion tests and the wiring and equipment conform to the best prescribed practices for "permissible" equipment.

Warden mine when opened was provided with eight "permissible" battery locomotives and eight cable-reel (single-conductor) locomotives. It was found necessary to consider the purchase of additional battery locomotives. This would have required additional charging sets, extra battery compartments for night shifts, and a larger charging station. Battery locomotives require a heavy investment, are limited to an eight-hour discharge, and can operate only in small areas. Their use at night necessitates a return to the charging station and extra battery compartments. After careful consideration it was decided to use the cable-reel locomotives and have their component parts "explosion proof." With this in mind, specifications were prepared which would endeavor to eliminate as far as possible the objections made heretofore to equipment of this character. These locomotives are limited to a speed of 4½ miles per hour when operating from the trolley, and to half speed when working from the cable. The control is of the semi-magnetic contactor series-parallel type. When energy is drawn from the cable the motors can be operated only in series and at reduced speed. Power is transferred from the trolley to the reel by a switch cylinder in the controller. This switch interlocks with the main control cylinder and can be operated only when this latter cylinder is in the "off" position.

Each locomotive is provided with two trolley poles. This is necessary, as trolley wire is placed on the side of the entry opposite the room necks. Transfer of trolley is also accomplished by the switch just described, as it has two contact points. The reel motor is always energized when power is flowing through the cable. The cable is handled only over the operator's end of the locomotive because it is believed that visibility of the cable will reduce the possibility of its over run by the locomotive. The motor bodies are of the box-frame type, conforming to the best modern practice. All cable connections

are made within explosion-proof compartments, and are continuous between compartments.

Some manufacturers have introduced the use of "through" bolts in the attachment of axle bearing caps. Those of you who operate locomotives have had considerable trouble with axle bearing caps when attached with cap screws. We all know that bad track conditions are responsible for this. This condition will exist to a greater or less extent as long as there are coal-mines in existence. "Through" bolts on axle caps are in general use on street railways. When a "through" bolt is broken, it can be easily replaced, while a broken cap screw can not. A loose axle cap destroys the motor body and interferes with alinement of gear and pinion.

The builders of locomotives do not agree as to the best design of a cable reel, nor do you. Some advocate vertical, and some horizontal reels. Personally I believe the vertical cable reel located centrally on the top of the locomotive is superior to the horizontal type. The vertical type is free from mechanical spooling arrangements, can operate equally well from either end, will hold more cable, and give a longer cable life.

R. L. Kingsland:* I believe Mr. Kiser has covered the operators' standpoint pretty generally. He mentioned just one thing with which I do not entirely agree, and that is that the bearings at the pinion end of the motor are a failure and roller-bearings are necessary. It is our idea that it is a question of keeping the dust out of ball-bearings or roller-bearings or any other kind of bearings, rather than necessarily changing the type of bearing. We do not feel that any of the manufacturers of standard housings that have been made for locomotive application have given enough attention to making these dust-proof.

In our mines we use a number of "permissible" battery locomotives for the gaseous mines. In those mines we are using entirely battery-operated equipment. We have used some cable-reel locomotives with the "permissible" equipment in what we consider not entirely gaseous mines.

There is one feature in connection with gathering locomotives that I feel has not been given full consideration for open mines—that

*Consolidation Coal Co., Fairmont, W. Va.

is, the question of larger cars. It has been mentioned several times as a reason for larger gathering locomotives. I rather feel that in some cases locomotives have been put in and larger cars then adopted on account of the locomotive. It is a question whether we get lower cost in all cases by doing that; unless there are other reasons for going to larger cars, such as mechanical loading, I believe in a great many cases we can get cheaper gathering with the small cars than with the large cars.

Forced ventilation for haulage locomotives finds its biggest advantage in the increase in continuous motor rating. I do not feel that we should sacrifice the size of the motor—that is, the rating without forced ventilation—in applying motors for haulage work. We ought to keep the horse-power per ton as high as we can, as has been found advisable in the past, and then add forced-draft ventilation to compensate for long hauls that require continuous rating through the day.

Graham Bright: I have felt that in a mine-locomotive motor it is highly essential to have an end bearing that will take the entire end thrust.

F. F. Jorgenson:* I believe the installation of all mine track should be governed, first, by the service it will be required to stand; and, second, by the length of time it will be required for use. If it is a main-line track over which many heavy trips will pass each day, drawn by heavy locomotives at high speed, and is to last over a period of many years, then a real railroad will be required. If the trips and locomotives are lighter and fewer in number each day and high speed is not essential, and the life is to be shorter, then lighter construction will be justified. Again, if it is temporary track for development work, or in rooms where the service is comparatively light and the life will be short, then lighter construction will still be in order.

For main-line, heavy-service, long-lived track, our company has adopted the following standard:

Sixty-pound steel laid on tie-plates on five-inch by seven-inch creosoted ties, spaced approximately 23 inches from center to center; crushed-rock ballast, thoroughly drained and properly alined. No. 4 frogs and turnouts are used, except in special cases. For lighter service

*General Manager, West Virginia Division, Consolidation Coal Co., Inc., Fairmont, W. Va.

and shorter life, less expensive construction is used. For development work and rooms, 30-pound steel laid on steel ties is standard. Nothing less than a No. 2 frog and turnout is used on light track.

We find that good track pays for itself in several ways. In the first place, wrecks and derailments are reduced to a minimum, thereby reducing liability of personal injuries. Speed of trips is increased, thus increasing the capacity of motive power. With better tracks, the man at the face gets better service, thus increasing his capacity. Upkeep cost of track, locomotives, and mine-cars is reduced and a more uniform production is maintained.

In comparing locomotive gathering with live-stock gathering, I believe I am safe in saying that the introduction of larger mine-cars is automatically eliminating live-stock gathering. Under normal conditions, it would appear that a three-ton car was approximately the limit for live-stock gathering. However, under certain conditions, it is entirely possible and may be more economical to use live stock with a four-ton car. Under most conditions, locomotive gathering should show a saving where three-ton or larger cars are used.

Good track, large cars, and locomotive gathering would appear to be the proper combination for safety and economy.

Graham Bright: There is an added advantage that has not been pointed out in connection with this improvement of track, and that is the better continuity of operation. You do not have cars off the track a large part of the time, you can run faster, and there are a great many advantages along that line that are pretty hard to measure. While we are on this car question I am going to ask Mr. Hockensmith to tell us about the capacity of cars we are running on to-day. Most of us have the idea that three or four tons is a pretty good size.

W. D. Hockensmith:* Car manufacturers and most mining companies are of the opinion that mine-cars of about 3½ to 4 tons capacity are the maximum that can be loaded by hand. When mechanical loading is to be used, there seems to be no limit to the size of cars except the clearances in the mines.

We are now able to offer, and have furnished, cars of 10-ton capacity. Such cars should be equipped with four-wheel air-brakes.

*President and General Manager, Hockensmith Wheel & Mine Car Co., Penn, Pa.

The Westinghouse Air Brake Company has such designs available. The car and brakes work satisfactorily and they now have a single control, but such cars could be fitted with brakes and double control the same as is now done in passenger-car service. The manufacturers of mine-haulage motors are now equipping these with air-brakes and pumps, and it will be only a matter of increasing the size of the pumps and adding the standard railroad air-hose couplings and air can be supplied for the cars.

You would be very much interested at seeing how a trip of 20 of these 10-ton cars can be handled by one man and a motor. The work of starting and stopping is quite simple and effective. These cars are 16 feet long overall and have a five-foot wheel-base, and they stay on the track on regular mine curves the same as the haulage motors. For large motors you must have good tracks; therefore the cars have this advantage.

One of the most important points in reference to these large cars is the tare weight. These 10-ton cars weigh about 6500 pounds, which is a 3 to 1 ratio. You will find many cars now in service with a ratio of 1½ to 1, and even lower. The tare load to the live load is an important item in the cost of the cars per ton of capacity and the cost of the haulage per ton of coal produced.

G. E. Gramm:* I came here to listen and not to talk. I agree with Mr. Kingsland in his remarks on bearings. We have had considerable trouble trying to keep dirt out of the bearings of our locomotives. It is my opinion that both the locomotive designer and the manufacturer of bearings are to blame in not getting together on a seal that will keep dust and dirt out of the bearing. We have designed a dust-guard that has proved satisfactory; at least at the end of seven months' trial the bearing looks as good as the day it was placed in service.

B. H. McCrackin:† I do not believe that I can add anything of value to the present discussion. I might say that I spend considerable time maintaining just such locomotive equipment as Mr. Clark and Mr. Shapter have described.

*Electrical Engineer, H. C. Frick Coke Co., Scottdale, Pa.
†Maintenance Engineer, Consolidation Coal Co., Inc., Fairmont, W. Va.

I believe that the manufacturers should devote a little study to eliminating a few features of the modern mine locomotive which cause excessive maintenance. For instance, with new tires on the wheels, the average clearance between the bottom of the gear case and the top of the rail is two inches. When the tires become somewhat worn, this clearance is diminished to such an extent that the coal between the rails wears holes in the bottom of the gear case, allowing coal and dirt to enter the case, causing undue wear on gears and bearings. This is also responsible to some extent for the entrance of dirt into armature pinions and ball-bearings.

Another feature of the high cost of maintenance of the mine locomotive is the frequent replacement of axles. Due to the axles becoming worn undersize at the bearing fits, especially the axle-cap fit, axles must be replaced frequently. I believe that the locomotive could be designed so that roller-bearings could be utilized at the points where the motor is suspended on the axle, eliminating wear of axles and practically eliminating the necessity of replacing axles due to wear of bearings.

L. F. Crawford:* The subject has been well covered. The only suggestion I can make is that, when tearing down the motor and removing the armature with the ball-bearings, care should be taken, when replacing the ball-bearings in the frame, to see that new felts are installed. This will increase the life of the ball-bearings.

W. L. Affelder:† One point that has not been mentioned here is that of permissible grades. I remember some years ago it was figured that a haulage locomotive could not work on a grade of more than four per cent. We have one mine in which we are running main-line locomotives on a recently regraded haulage road where the average grade is 6.7 per cent. against the loads. We are using tandem locomotives on that grade and are getting along fairly satisfactorily. We are doing it on 70-pound track.

Mr. Hockensmith's remarks on the 10-ton car remind me of an incident which occurred about twenty years ago. I was then with the H. C. Frick Coke Company. Men were rather scarce at one of the

*Coal Mine Equipment Co., Pittsburgh.
†Assistant to President, Hillman Coal & Coke Co., Pittsburgh.

mines where large wooden cars were in use. The mine foreman was going along the main entry in the mine and met a man coming out with his tools on his shoulder. "What are you doing?" he asked. The fellow answered "I have quit." "How long have you been working here?" "I started this morning." The foreman tried to encourage him to stay and to find out why he quit. Finally he said, "They put one of those wagons in my place this morning and I started to shovel coal into it, and after I had been shoveling for 20 minutes I looked over the edge of the car to see how near full it was. Just then the first shovelful landed in the bottom of the car."

J. M. Carmody:* When the announcement of this meeting came to my desk on Monday, I sensed something more than ordinarily worth while. I have been fully repaid for coming. The meeting is unusually significant, largely because men have come here to take a whole day to exchange experiences with other operating men. Of course, those of us in the publishing business realize that there are two ways in which we can learn. One is by listening to other men who have had experience and one is by reading about other men's experience. It has been the practice of *Coal Age* for several years to bring out a "Model Mine Number." For that number this year the Pittsburgh Coal Company has been selected and the editors of *Coal Age* have been working on the job for two months. They have had excellent co-operation from Mr. Lesher and every other executive of the Pittsburgh Coal Company. The articles are ready to go into type and I should advise those of you who are interested in what the Pittsburgh Coal Company is doing in detail to see this issue.

Graham Bright: The trouble with ball-bearings when first introduced into locomotive armatures was the lubrication question. The idea of oiling every six months is a good one provided the oil stays in the bearing; but the early types were not designed to hold the lubricant. In a month or two the oil was all gone and before the oiling period came around again the bearing was gone. I think, however, the housings of to-day will hold the lubricant and also take care of this dust situation.

Somebody mentioned the decreasing use of mules. Many men in this audience should have something to say on that point. I think that

*Editor, *Coal Age*, New York.

where the cars are not too large the mule can still beat the gathering locomotive when it comes to actual cost.

C. E. LESHER:* I was thinking someone would ask what are the factors that determine the type of gathering, whether mechanical or mule. I would like to ask the Chairman to call on some of these motor experts to throw some light on that point.

G. H. SHAPTER: Frankly, that is too hard a subject to discuss; but I have a feeling that when you have a gathering locomotive that will take the place of three mules or more, it is a paying proposition. Of course, a gathering locomotive costs more than three mules; but if the gathering locomotive will collect as many cars as three mules and three drivers it can be figured out as an economical proposition. That is about all I can say on that subject. There are cases, of course, where mules will beat gathering locomotives all to pieces.

GRAHAM BRIGHT: The comparison has been made with the mule and bad track and new track for the gathering locomotive, showing quite a saving for the locomotive. With better track, the mule would do better work also. Where the room is high enough they use mules. Where the seam gets down to three feet, that eliminates the mule entirely.

The question of power used by the gathering locomotive is one that I have given a little study to at different times. The storage-battery locomotive usually takes more power than the trolley type because the battery has an efficiency of about 50 per cent., taking everything into account. In regard to gathering conditions there are cases where the storage battery actually uses less power than the gathering locomotive itself. That is due to the fact which Mr. Shapter pointed out, that they run on resistance points nearly all the time. If you get a good voltage regulation in gathering service they are running on a great deal of resistance. If they have poor regulation, that simply transfers the losses from the resistance in the locomotives to the transmission system. It is not hard to conceive of conditions where a storage-battery locomotive will actually take less power in gathering than a trolley type and give a much better load-factor on the power system.

*Executive Vice-President, Pittsburgh Coal Co., Pittsburgh.

The storage-battery locomotive ought to have a heavier track. At the same time there is no bonding at all. That helps out the storage-battery locomotive. In the wilds of West Virginia I have seen conditions where you can see arcs ahead of you as you come out of the room. If there is a headlight on the locomotive it will go out. That is a condition that is not excusable in modern mines.

W. L. Affelder: That particular phase of the question will be solved to some extent this year by a joint fellowship between the Carnegie Institute of Technology and the United States Bureau of Mines. One of their research fellowships is on that very question of comparative consumption of power used by battery locomotives and trolley locomotives, and there will be some very interesting facts developed by actual tests.

Graham Bright: That is a fellowship that has been going on about a year and has another year to go. They expect some very interesting results from that investigation.

C. E. Lesher: We have had many a conference on the particular subject we have to-day—mine haulage and mechanical loading—but we have had most of these conferences down at Cincinnati where they talk about two-foot coal and 20-foot coal, and all kinds of conditions that we do not know about around here. This is the first time we have had a general conference to consider these problems in this particular district. We have representative men here who are working on this problem. The first thing to do is to get right down to business, and we have asked Mr. Young* to come up here and start the discussion on mechanical loading in the Pittsburgh district. We started to work on mechanical loading in this district long before it was brought to any degree of perfection. Some of the first general work on mechanical loading was done in this district before the World War. It is now arriving very rapidly. Mr. Young will set forth the problem and he is at liberty to call on any of you for discussion.

W. A. Clark:† The discussion has been very interesting and a number of points have been brought out by the men who have had

*Proceedings, April 1928, p. 97.

†General Engineer, Westinghouse Electric & Mfg. Co., East Pittsburgh, Pa.

experience in applying and maintaining locomotives. Mr. Kiser has brought out a number of points in regard to the use of low-speed gathering locomotives and the use of the contactor control with its lower maintenance than that of drum-type control. In regard to the use of bearings, I agree with Mr. Kingsland that it is more a question of maintaining the housings tight and keeping the dirt out of the bearings than whether ball-bearings or roller-bearings are used. I have nothing further to add to the discussion.

SOME NOTES ON THE LOSS OF PRESSURE AND TEMPERATURE IN COLD-BLAST LINES*

By J. S. Fulton†

At the present moment in all steel companies a great deal of thought is being given to the all-important question of costs. With a "buyers' market" in progress, the steel is sold; not, so they say, at a legitimate profit above all costs, but at whatever the "going price" is at any particular time. The going price in turn is established by some manufacturer whose costs are enough below to allow him a profit. If two plants, A and B, exist within a certain district, and have no advantage over each other in raw material, but A can actually produce at a lower total cost, then B must take steps to get into line. Until B does so, it will be necessary for him to run near the danger line where profits fade away into losses, and hope to recover his losses when and if demand increases. Maybe the price is such that he can sell at cost, but there is no great sport and certainly no profit in trading dollars for dollars, and he is only putting off the improvements he knows he must make to keep alive.

The improvements that have been made, in general, may be divided into two rough classifications:

Improvements in mill cost.
Improvements in power cost.

Improvements in mill cost may be considered as anything that will reduce the fabricating cost of the particular commodity in the form in which it is sold; thus may be included any or all improvements from mill electrification to open-hearth, Bessemer, or blast-furnace practice, etc.

Improvements in power cost may be considered as anything that will reduce the cost of the particular commodity in the form in which it is sold, by lowering the cost of wind, water, steam, or electricity; thus may be included improvements such as blowing equipment, pumps, boilers, and generators. Of these, we will concern ourselves only with the possibility of improvement in the method of handling the wind after it has left the blowing-engine house.

In the early part of 1927 there was considerable discussion as to the influence of higher cold-blast temperature, for any given blast

*Presented February 7, 1928. Received for publication April 14, 1928.
†Special Representative, Ingersoll-Rand Co., Pittsburgh.

pressure, upon the heat required in the stoves in raising the wind to its ultimate hot-blast temperature. It was claimed that, roughly, five per cent. of the gas for the stoves could be saved at 20 pounds blast pressure and 1000 degrees F. hot-blast temperature by delivering the air into the cold-blast main at 250 degrees F. instead of 200 degrees F. with, of course, the same intake temperature. In order to determine the probability of this saving, a search was made for any published information on temperatures in cold-blast lines. Practically nothing of importance was found, and it was decided to obtain readings from a number of different plants; for until it was known what percentage, from 100 down, of these surplus 50 degrees F. actually reaches the stoves, it would be impossible to say what the net gain might be.

The answers have been tabulated in Table I. The readings were taken by local men and with local gages or mercury columns for the blast pressures, and local thermometers for the cold-blast temperatures and air temperatures. The figures in general may be considered accurate, but in any particular instance are probably not as accurate as could have been made with a trained crew shifted with their instruments from plant to plant. No record was made of the moisture per cubic foot of air entering the blower, and it has been ignored as having probably the same general influence on all readings. It would have to be included if accurate results are desired.

The columns up to 15 are "plant data." In column 2, "P" indicates piston displacement, and "T" indicates turbo-blower. Columns 15 to 21 are all various functions of the cold blast which, for the sake of uniformity, has been reduced to 32 degrees F. and 14.7 pounds absolute pressure. Column 15 gives the net cubic feet per hour to the stoves, assuming that 83 per cent. of the piston displacement and 98 per cent. of the turbo wind from the turbo-blower reaches the stoves; or, in other words, assuming a leakage between blower and stove of two per cent. of the actual wind. Referring this column 15 back to columns 9 and 10, we find that the average recorded temperature of the air entering the blowers is 18 degrees F. above the outside air temperature, or 18 in 534 degrees, or 3.4 per cent. increase of volume. This is a direct loss of power, for the weight of oxygen per cubic foot is decreased by the increase in air temperature, just as if the air had been compressed and delivered at the cold-blast temperature of the stove; consequently 3.4 per cent. more volume must be handled,

TABLE I. TEMPERATURES IN COLD-BLAST LINES

	1	3	4	5	6	7	8	9	10	11	12	13	14	15	16	17	18	19	20	21
		COLD BLAST						Air Temperature		COLD-BLAST LINE				COLD BLAST AT 32 DEGREES F. AND 14.7 POUNDS ABSOLUTE						
		Pressure		Difference		Temperature									B.t.u. per cubic foot at				Mean temperature difference	
Number	Wind in cubic feet per minute	Blower	Stove	Lbs.	Degrees	Stove	Blower	Blower	Out.	Length Feet	Diameter Inches	Number of valves and fittings	Surface area Square feet	Cubic feet per hour	Blower	Stove	Difference	B.t.u. transfer per hour	Degrees F.	B.t.u. per square foot per hour per mean temperature difference
1	63,810	22.63	22.37	0.26	55	225	280	93	77	440	40	10	5,460	2,770,000	4.725	3.675	1.050	2,915,000	176	3.030
2	62,000	20.50	19.80	0.70	57	227	284	100	75	321	40	22	3,160	2,660,000	4.800	3.720	1.080	2,875,000	180	5.050
3	58,881	18.50	17.80	0.70	29	221	250	84	73	408	48	12	5,120	2,600,000	4.160	3.600	0.560	1,455,000	163	1.745
4	57,496	19.70	19.30	0.40	35	221	256	82	70	408	48	12	5,120	2,540,000	4.275	3.600	0.675	1,715,000	169	1.980
5	57,496	19.80	19.70	0.10	49	229	278	99	79	440	40	10	5,460	2,465,000	4.690	3.750	0.940	2,318,000	175	2.420
6	57,496	19.20	18.50	0.70	38	224	262	90	79	408	48	12	5,120	2,510,000	4.380	3.650	0.730	1,831,000	164	2.180
7	57 496	19.50	18.90	0.60	41	231	272	96	80	408	48	12	5,120	2,478,000	4.575	3.790	0.785	1,945,000	177	2.147
8	54,426	15.00	14.50	0.50	40	190	230	103	66	693	42	13	7,990	2,320,000	3.775	3.000	0.775	1,795,000	144	1.560
9	53,510	19.00	18.40	0.60	97	180	277	86	75	680	54	12	7,580	2,350,000	4.670	2.810	1.860	4,365,000	154	3.750
10	53,504	20.00	19.20	0.80	10	203	213	77	77	300	36	5	2,820	2,390,000	3.450	3.250	0.200	478,000	131	1.293
11	46,170	16.20	16.00	0.20	36	194	230	103	66	746	42	17	8,760	1,965,000	3.775	3.075	0.700	1,377,000	146	1.175
12	38,500	14.50	14.40	0.10	8	152	160	82	58	145	30	5	1,135	1,705,000	2.425	2.270	0.155	264,000	98	2.372
13	25,284	19.00	17.90	1.10	43	220	263	96	81	408	48	12	5,120	1,091,000	4.410	3.575	0.835	911,000	161	1.104
14	55,000	21.25	21.12	0.13	20	201	221	70	70	350	42	6	3,850	2,932,000	3.600	3.210	0.390	1,142,000	141	2.105
15	55,000	16.00	15.75	0.25	41	185	226	83	83	433	48	8	5,450	2,865,000	3.700	2.915	0.785	2,246,000	123	3.350
16	53,000	15.20	15.00	0.20	29	178	207	80	80	530	48	8	6,650	2,772,000	3.325	2.775	0.550	1,521,000	113	2.015
17	52,000	19.80	19.20	0.60	24	213	237	85	85	520	42	9	3,760	2,700,000	3.915	3.450	0.465	1,254,000	140	2.382
18	51,870	18.40	18.00	0.40	41	191	232	97	97	511	40	19	7,620	2,630,000	3.820	3.025	0.795	2,086,000	115	2.415
19	48,000	19.20	18.40	0.80	16	178	194	64	64	370	42	7	3,180	2,590,000	3.075	2.775	0.300	777,000	122	2.000

requiring 3.4 per cent. more power. In cases 8 and 11 this percentage is 37 in 537 degrees, or 6.9 per cent. increased power. Column 16 gives B.t.u. per cubic foot of air at cold-blast temperature, referred back to the same 32 degrees F. and 14.7 pounds absolute at the blower and column 17 at the stove.

It is assumed that the compression will be approximately adiabatic and that consequently the poorer the compressor for the same ratio of compression the higher will be the discharge temperature. We may thus rewrite our conventional formula on the basis of temperatures and so determine the B.t.u. in the air discharged from the compressor. In this way we can ignore the discrepancy that exists in every case between the observed discharge temperature and the theoretical discharge temperature for the particular blast pressure, or, more precisely, the particular ratio of compression.

$$\text{Work} = \frac{(144 \times P_1 \times V_1)}{(n-1)} \left[1 - \left(\frac{P_2}{P_1}\right)^{\frac{n-1}{n}} \right] n$$

Where Work = foot-pounds required to compress and deliver one cubic foot of air from 32 degrees F. and 14.7 pounds absolute to some higher pressure.

144 = the number of square inches in one square foot under a pressure of

P_1 = 14.7 pounds absolute per square inch in all cases.

V_1 = one cubic foot.

P_2 = discharge pressure in pounds per square inch absolute.

n = ratio of specific heats = 1.41.

$\left(\frac{P_2}{P_1}\right)^{\frac{u}{n-1}} = \frac{T_2}{T_1}$ by inspection, where

T_2 = absolute discharge temperature in degrees F.

T_1 = absolute intake temperature, or 492 degrees F.

J = Joule's equivalent = 778 foot-pounds per B.t.u.

Rewriting gives the following form:

$$\left.\begin{array}{l}\text{B.t.u. per cubic foot from and} \\ \text{at 32 degrees F. and 14.7} \\ \text{pounds absolute.}\end{array}\right\} = \frac{144 \times P_1 \times V_1}{(n-1) \times J} \left[1 - \frac{T_2}{T_1} \right] n$$

$$= \frac{144 \times 14.7 \times 1 \times 1.41}{0.41 \times 778} \left[1 - \frac{T_2}{T_1} \right]$$

$$= 9.35666 \left[1 - \frac{T_2}{T_1} \right]$$

The resultant sign is negative because external work must be done on the air to change it to its state of higher pressure and temperature.

Column 16 represents B.t.u. per cubic foot as discharged by the blower.

Column 17 represents B.t.u. per cubic foot as received at the stoves, including their various adjustments for change in pressure, temperature and velocity head.

Column 18 gives the difference in B.t.u. per cubic foot at the beginning and end of the cold-blast line.

Column 19 gives the total B.t.u. loss per hour between the blower and the stoves.

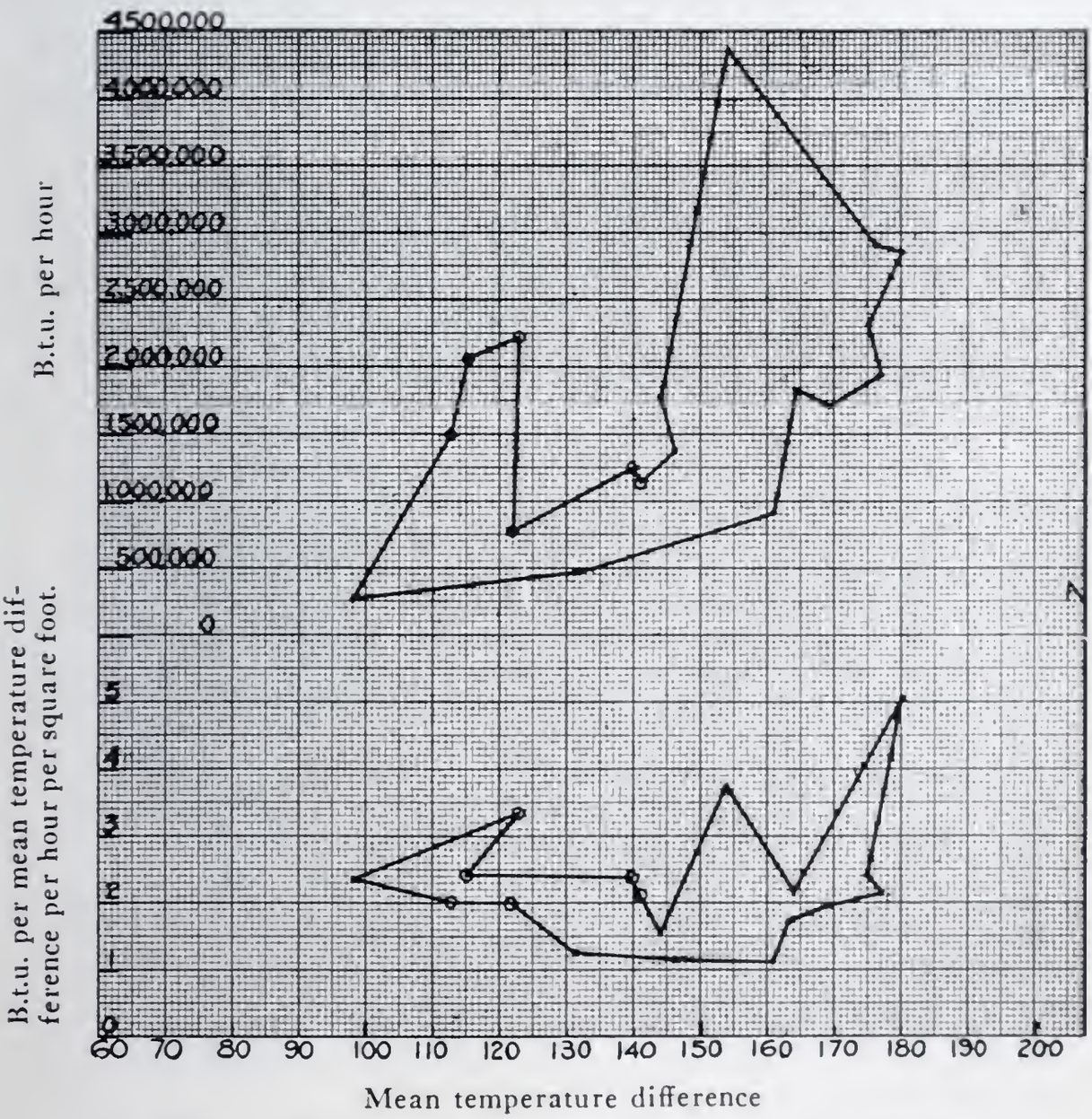

Fig. 1. Relation between Cold-Blast and B.t.u. Transfer.

Column 20 gives the mean temperature difference between the cold blast and the outside air, assuming that the cold-blast line is surrounded by air at atmospheric temperature. This is not necessarily so and may account for some of the later discrepancies.

Column 21 has been developed to show the transfer of the heat of the cold blast into the material of the cold-blast pipe itself, and so from it to the surrounding air. It is noted that the B.t.u. per square foot per hour per degree mean temperature difference varies widely. Taking items 1 and 5, which are for the same plant at different times, the former transfers 3.030 B.t.u. and the latter 2.420 B.t.u., with, of course, variables in the blast conditions and the surrounding air as well. Also, items 3, 4, 6, 7, and 13 represent another plant, and here the values are 1.745, 1.980, 2.180, 2.147, and 1.104. By inspection, there is little possibility of finding a law or relationship between temperature of cold blast and B.t.u. transfer, so the following figures have been plotted.

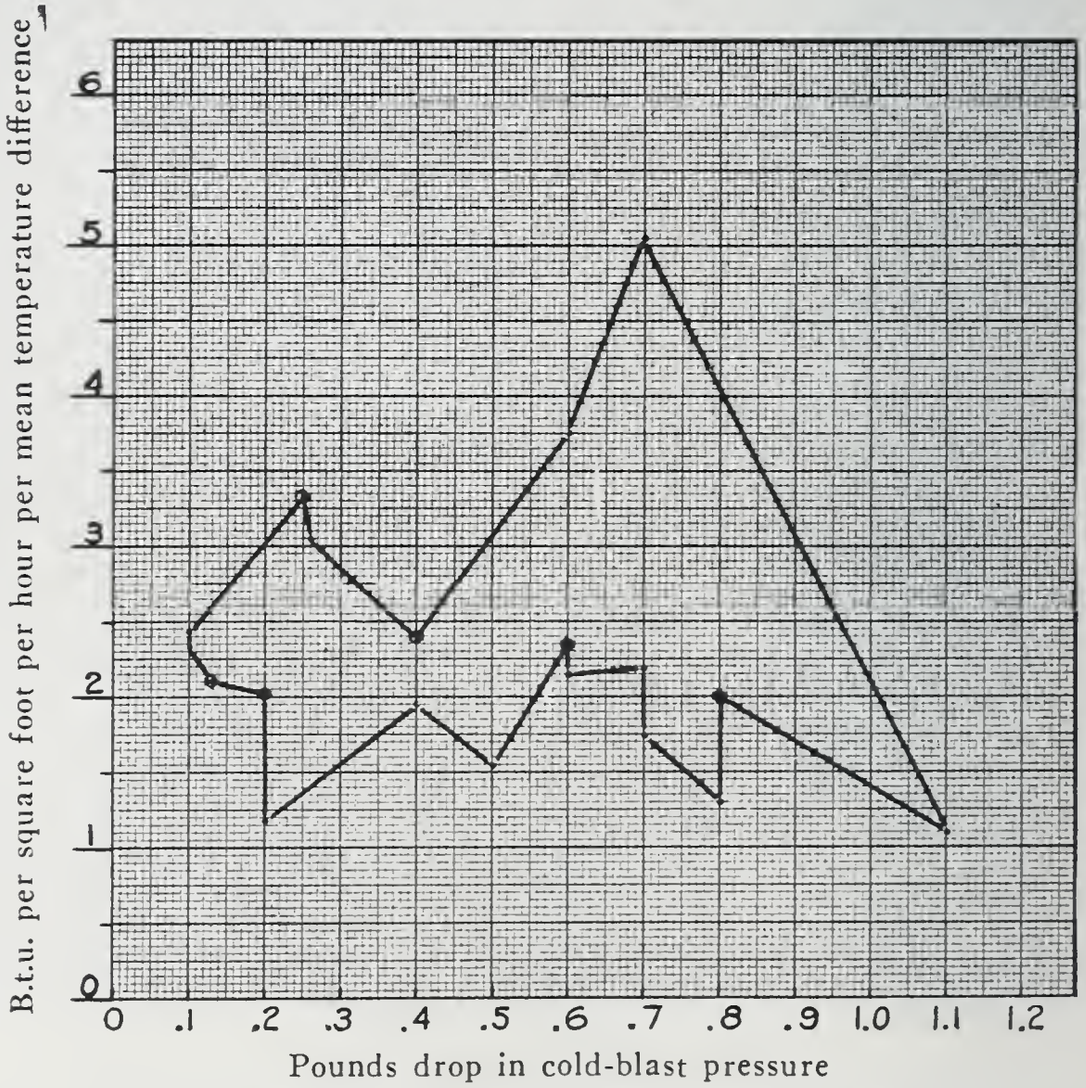

Fig. 2. Relation between Cold-Blast and B.t.u. Transfer.

Fig. 1 is plotted with "mean temperature difference" horizontally, against B.t.u. per square foot and also total B.t.u. Unfortunately, no curve is developed in either case, there being two readings possible for practically any point of mean temperature difference. In Fig. 2 and 3 the points indicated by circles refer to turbo-blowers, while those indicated by dots refer to blowing-engines.

Fig. 2 was plotted with "pounds drop in cold-blast pressure" horizontally, against B.t.u. transfer per square foot vertically. Again the results fail to fall on a curve and give double readings for nearly every horizontal ordinate.

Fig. 3 gives graphically the relationship between B.t.u. per cubic foot and cold-blast temperature. Again no curve is developed.

In conclusion we may say from these figures that there is a very slight indication that the greater the mean temperature difference, the greater the B.t.u. loss per square foot per hour. However, there is no conclusive set of figures to prove or disprove this. The matter of B.t.u. loss will remain debatable until an accurate set of tests is run on a number of plants taking into account, in addition to the above figures, data on:

Exposure of cold-blast line.
Insulation of cold-blast line.
Humidity.
Wind or rainfall or snow on the line.

From accurate tests of this nature useful data will be adduced.

In the meantime we will come back to the original idea of saving power. Certainly it will be worth while saving two or three or four million B.t.u. per hour in our delivery of the cold blast from the blower to the stoves. The B.t.u. lost from the cold-blast line from change in temperature and pressure were derived from the mechanical power of the blower converted into B.t.u. If the thermal efficiency of the blower, fuel to delivered wind, is only 10 per cent., then the B.t.u. lost from the cold-blast line must be multiplied by 10 when we consider the replacement fuel from which they really come. The same argument applies to even a greater extent on the possible loss from the hot-blast line. There, of course, we may conceive the B.t.u. losses divided into two classifications—temperature losses direct from drop in heat just supplied by the stoves, and temperature losses indirect

from drop in pressure which must be supplied from the blower in the same way as just figured.

Though we did not find how much the temperature would drop between the blower and the stove, we have found it advisable to con-

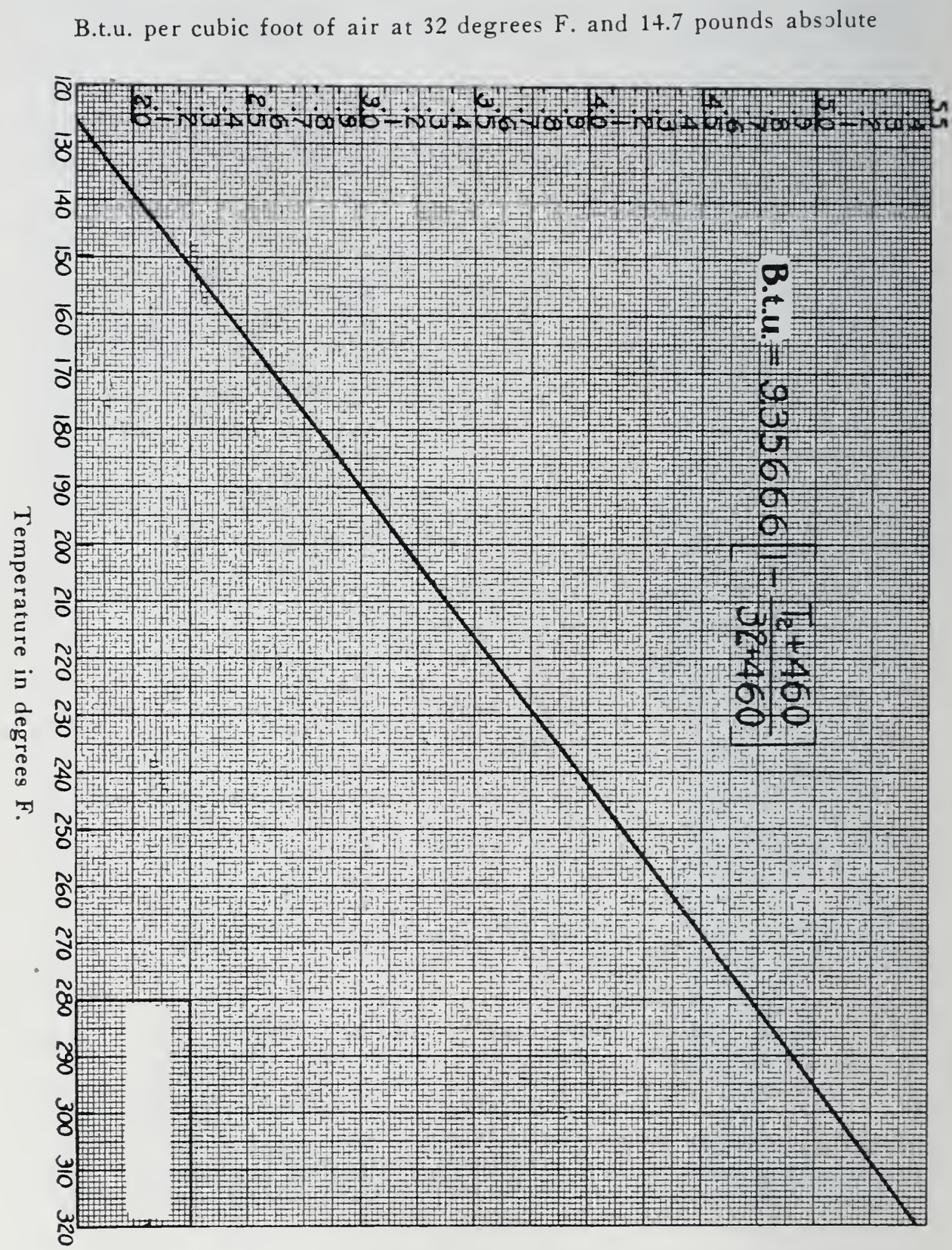

Fig. 3. Relation between Cold-Blast Temperature and B.t.u. per Cubic Foot.

sider the savings from ample cold- and hot-blast lines, free from bends and (in the case of turbo-blown furnaces) with well insulated blast lines. The fire hazard makes insulation inadvisable for reciprocating-blown furnaces. If the savings in B.t.u. will more than pay for the changes, then the cost of producing pig-iron will be reduced a little more.

Thanks are expressed to the friends and their assistants who dug up the information that made these notes possible.

DISCUSSION

D. E. Cutler:* The information which the paper has presented is very interesting, and the author should be commended for his efforts along this line. I am wondering why the curves which have been shown do not conform to closer limits and more consistent results. Apparently local conditions have a great influence on heat losses of cold-blast mains. There is undoubtedly much to be gained by more thorough investigation along this line.

W. N. Flanagan:† I do not believe that I can offer anything very definite. As Mr. Fulton showed, every time it is desired to make any heat transfer tests under actual operating conditions so many variables enter therein that every location shows up differently. This is particularly true in the case of cold-blast lines, as at some furnaces almost all the mains may be out of doors, while at others the lines may be either entirely inside of buildings or between buildings and pretty well protected from wind. Those on the inside will, of course, usually be blanketed by warm air. In one case of which I know, the cold-blast lines run for the entire length over the top of gas-fired boilers, and are therefore surrounded by warm air, but at the same time subjected to quite a circulation induced by roof ventilators. In another case the lines run completely outdoors and have vertical dips or expansion joints. Even inside of buildings the air circulation varies and changes the convection of the heat from the lines, and it is therefore rather hard to get any correlated figures in actual practice. Tests conducted in a laboratory may result in a series of pretty logical

*Compressor Specialist, General Electric Co., Pittsburgh.
†Special Engineer, Carnegie Steel Co., Pittsburgh.

curves, but when run on any individual blast line it is next to impossible to make proper allowance for air velocity on the outside, since, even if protected from direct windage, there are still air currents from other causes.

Mr. Fulton's paper indicates that, particularly in the case of the higher blast temperatures obtained with some blowers, it might be advantageous to insulate the cold-blast mains. This agrees with some rather sketchy calculations which I made just before this meeting.

L. E. Riddle:* I find that at the Duquesne furnaces we have at the present time a difference in temperature of the air delivered to the stoves, and we are of the opinion that it is due solely to a difference in the length of the lines. The air delivered at No. 1 furnace will average about 220 degrees in temperature, while at No. 6 furnace it is about 160 degrees. In the one case the cold-blast line is about twice as long as in the other. We have never given much thought to this loss and I have never heard blast-furnace men discuss temperature drop in cold-blast lines. It is interesting to know, as Mr. Fulton shows, that there is a difference of 18 degrees between the average inside and outside temperatures taken at blowing rooms; and that taking the air from the outside and regulating the blowing by temperature will amount to a power saving of about 3½ per cent. with this 18 degrees difference. This should be given much thought. Most blast-furnace men prefer to take the air from the outside, and many do, but many others are not allowed to spend the money required for the necessary changes to bring the air in from the outside. The fact that an average of 3½ per cent. power might be saved by doing so should make a good talking point when asking for money to make such changes.

All of us have given a lot of thought to the insulation of hot-blast lines. It has now become general practice. At Duquesne, hot-blast line temperatures will drop as much as 172 degrees in 81 feet in uninsulated hot-blast lines. In a special case, where we had 1712 degrees temperature at the stove, we had a drop of 182 degrees to 1530 degrees at the furnace. When we get to 1050 or 1100 degrees of blast temperature, this drop is only about 72 degrees. In all tests the drop varies directly with the temperatures of the blast.

*General Superintendent, City Blast Furnaces, Carnegie Steel Co., Sharpsburg, Pa.

Mr. Fulton mentioned the difference in pressure or pressure drop. From my experience with a large number of furnaces I find pressure drop is not uniform; sometimes we have 2½ and other times 1½ pounds drop between blowing engines and furnace. We get these irregularities of pressure drop on the same furnace with the same gages.

G. E. DIGNAN, *Chairman*:* Do you mean the stove?

L. E. RIDDLE: We usually speak of this drop in pressure between the blowing-engine and the bustle-pipe of a furnace as back-pressure. This back-pressure exists whether you are blowing with the cold-blast valve wide open or using a heat-regulating valve. It frequently increases when the furnace is using low blast temperatures, for then the cold-blast valve is often partly closed and the regulating or mixer valve is open. In every case that I have looked into, the short connecting cold-blast line that delivers air to the mixer valve appears to be small in comparison with the cold-blast main, and this is one cause of back-pressure.

D. E. CUTLER: Mr. Fulton has brought out some very good points on the transmission of air and transfer of heat. He mentions a temperature difference of 50 degrees between the discharge air temperature of an air-cooled blower and that of a water-cooled blower. He has also shown that the heat lost in the pipe-line depends on the difference in temperature between air in the pipe-line and the surrounding atmosphere. For every degree difference in temperature across the walls of the pipe-line, a rather definite amount of heat is lost, indicating that the higher the temperature of the air being transmitted, the greater the loss. Unless you undertake to save that heat by insulation, as he suggests, there will be a direct loss in transmission at the higher temperatures.

G. E. DIGNAN, *Chairman*: Not unless there is an appreciable heat saving accompanied by a saving in gas. Most blast-furnace operators are more concerned with getting high blast temperatures than with the possibility of a slight decrease in the amount of gas required for heating the blast. Insulation of the cold-blast main might be justified when it is necessary to get the last B.t.u. out of the gas delivered

*Chief Engineer, Rust Engineering Co., Pittsburgh.

by the furnace, but it is questionable whether insulating a long cold-blast main would be economical under ordinary conditions.

L. E. Riddle: I think the point that concerns the blast-furnace operator is not so much that of keeping the temperature of the cold blast up in order to save gas when going after high blast temperatures as it is that when he needs high heat badly he is more concerned in getting and retaining it in the hot blast than he is about how much gas it takes to get the additional heat. In this country most of us are still wasteful with blast-furnace gas, and not equipped to take all we might out of it.

E. P. Jump:* Does Mr. Fulton advocate a blower that is not water cooled? I did not know that one was made by the Ingersoll-Rand Company.

You will find that, in the compressing of air by centrifugal blowers for use in blast-furnaces, both the water-cooled and non-water-cooled blowers have their advantages. Water-cooled blowers should require less power to operate because of the lower pressure due to cooling the air as it is heated during compression. On the other hand, however, if the blower is not water cooled and the air is allowed to heat up proportionately to the work done in compressing it, and if it is properly insulated so that not too much heat is lost between the blower and the stoves, it will be found that the stove heat required to raise the temperature of the cold blast to the required straight-line, hot-blast temperature will be reduced by the amount of heat represented by the difference in temperatures between cold blast as delivered to the stoves from water-cooled and non-water-cooled blowers. It is also true that the maximum hot-blast temperature that the stove can yield is increased by this same difference in temperature.

D. E. Cutler: Referring to previous discussion relative to the merits of compressing air by a water-cooled blower or an air-cooled blower, it is known that theoretically it takes approximately 73 per cent. of the power to compress air isothermally as compared with adiabatic compression. There has already been a great deal of discussion and calculation as to the merit and adaptability of each type of compression. It has been pretty well agreed that for low compression

*Test Engineer, Duquesne Works, Carnegie Steel Co., Duquesne, Pa.

the saving due to water cooling is not attractive. On the other hand, the higher the discharge pressure, the greater the saving in power consumption due to water cooling. It will be seen from this that from a purely compression standpoint, as the pressure rises, the advantage of no cooling diminishes and the advantage of cooling increases. I do not believe it has even been definitely determined under actual operating conditions at what pressure the net gain of one type of compression stops and the other starts. In order to determine this, a great deal of accurate operating information would have to be obtained, such as the efficiency of the boilers, turbines, blowers, and stoves. Some estimates which have been made show that the pressure, which we might call the dividing line between the two types of compression, varies over a wide range, depending upon the assumptions used for operating conditions. Some blower manufacturers feel that water cooling is essential to eliminate undue expansion due to high temperature rise of the air.

L. E. Riddle: If given all the financial aid required to equip stoves and boilers so that they give maximum results from gas after it has been thoroughly cleaned, I believe that the furnace man would be able to furnish power for the steel-works and in most cases have surplus power.

Following up that thought about the number of B.t.u. in the gas, and the amount of gas used by the furnace for heat and power to operate it, formerly furnace men were satisfied to use 25 to 35 per cent. of the gas produced to get the blast temperature required; but now, with more efficient burners, larger hot-blast stoves, and smaller checkers, we are developing 1400 to 1500 degrees of straight-line blast temperatures with only 17 per cent. of the gas produced by the furnace.

J. S. Fulton: It was not the writer's intention to advocate any particular type of centrifugal blower for a blast-furnace, but rather, as expressed in the first of the paper, to find out what was happening in the cold-blast line between the blower and the stoves. While the results were obtained from a number of plants, it was impossible to bring them to any common basis. The relative exposure of the cold-blast lines could not be evaluated and only the results of these relative exposures could be noted. The general conclusion indicated was that the greater the difference between the temperature of the cold-blast

line and the outside air, the greater the drop in cold-blast temperature between the blower and the stoves.

If there is to be any B.t.u. saving in the blast-furnace plant as a whole by the use of uncooled blowers, with their higher discharge temperature, it is obvious that this saving can come only if the increased discharge temperature actually reaches the stoves. It has been reported that two blowers ran under the following conditions:

	Uncooled	Cooled
Barometer, pounds absolute	14.5	14.5
Blast pressure, pounds gage	18.5	18.5
Intake air temperature, degrees F.	39.0	38.0
Discharge air temperature, degrees F.	24.0	18.2
Excess air temperature, degrees F.	32.0	0

Taking the same figures from Table I where we can consider the reciprocating blowing tubs as being equivalent to the uncooled blower we find:

	Reciprocating blowing tubs	Cooled turbo-blowers
Barometer, pounds absolute	14.70	14.70
Blast pressure, pounds gage	18.73	18.31
Intake air temperature, degrees F.	92.00	80.00
Outside air temperature, degrees F.	74.00	80.00
Discharge air temperature, degrees F.	251.00	220.00
Excess air temperature, degrees F.	31.00	.....
Stove intake temperature, degrees F.	210.00	193.00
Loss up to stoves	41.00	27.00
Excess loss	14.00	.....

Enough plants were observed to allow the local variables to neutralize one another, and a fair picture is shown of what we may expect the heat drop to be in the cold-blast line of an average plant. The reciprocating plants showed that only about one-half the excess cold-blast temperature actually reached the stoves. By analogy then, we can assume that only about one-half of the 32 degrees F. excess cold-blast temperature of the uncooled blower will reach the stoves and the heat balance must be made upon the latter basis.

So far, this is merely a hypothesis; only an accurate, thorough test will show the true results for each particular plant.

ADDITIONS AND ALTERATIONS TO THE STORE OF THE KAUFMANN AND BAER COMPANY, NOW GIMBEL BROTHERS, INC., FOR THE ESTATE OF HENRY W. OLIVER*

By C. S. Davis†

This title, referring to recently completed alterations and additions to the store of Gimbel Brothers, Inc., does not begin to convey a proper idea of the extent or magnitude of the work done. A description of the property as it was before the alterations and additions were started is essential to a clear conception.

The store is a 12-story building of which the first story is 32 feet high, having a mezzanine floor forming a gallery all the way around, making it, in reality, a 13-story building. It is located at the corner of Sixth Avenue and Smithfield Street, Pittsburgh, and, with the exception of an area of 40 by 60 feet at the corner of Smithfield Street and Strawberry Alley, occupies a plot fronting about 240 feet on Smithfield Street and 214 feet on Sixth Avenue.

In 1902 it was decided to build on the rear corner of the site occupied by the present store building a central power-plant, having a frontage of about 93 feet on Strawberry Alley and a depth of about 104 feet along its easterly side and about 122 feet along its westerly side, adjoining the Duquesne Club. This was to be built eight stories high, with provision for the addition of six more, the space below the first floor to be used for a power-plant, and the upper floors to be devoted to printing and light manufacturing. In 1903 and 1904 the power-plant and one story of this building were constructed. In 1906-1908 the power-plant was enlarged and the building carried up to a height of eight stories. The stack for the power-plant was located at its rear corner or about midway between Strawberry Alley and Sixth Avenue, adjacent to the Duquesne Club. In 1908-1910 the Henry W. Oliver building, a 25-story office building, was erected on Smithfield Street extending from Sixth Avenue to Oliver Avenue. The tenants of this building objected to the smoke issuing from the stack of

*Presented March 6, 1928. Received for publication April 14, 1928.
†Consulting Engineer, Pittsburgh.

the power-plant, so in 1911 the stack was lengthened to carry the smoke above the Henry W. Oliver building. The method used in lengthening was unusual and deserves description.

The four steel columns at the rear of the "Power building" were extended in the form of a tower to a level just above the roof of the present store building; on these, two cantilever trusses were erected with the projecting ends reaching to the far side of the stack. On these cantilever trusses, the extension to the stack was erected, starting at about six feet above the top of the old stack, and leaving the space between the old and new sections for the escape of smoke and gases to enable the workmen to complete the extension. After the extension had reached its full height, the space between the old and new sections was closed in, completing the work. The designing of the towers, trusses, and connections, to resist all wind stresses safely, was in itself no simple problem, and those having this work in hand deserve much credit for carrying it through to a successful conclusion. The tower and cantilever trusses were left in place and later incorporated into the store building.

During 1913 and 1914 the Kaufmann and Baer building was built. In erecting this building, the old central "Power building" was incorporated as a part of it and was raised five stories to the same height as the rest of the building. As previously mentioned, the tower and trusses used in erecting the extension to the stack were incorporated into the new building and became a part of its structural frame. The first floor of the old central "Power building" was 25 inches higher than the first floor of the new building, so certain panels were lowered to the new first-floor level in order to provide a shipping platform along Strawberry Alley, and access thereto from the new store building.

When the Kaufmann and Baer store was built, the power-plant, occupying space below the first floor, was extended through to Sixth Avenue. That part of the first basement between the power-plant and Smithfield Street amounting to about one-half the area of the building was used for selling space; that part of the second basement immediately below this was used for mechanical equipment for the store. The power-plant was installed in the second basement floor in the westerly half of the building and occupied all space below the first floor. There was a third basement under a portion of the building,

extending in an L shape from Smithfield Street along Sixth Avenue about two-thirds of its frontage and then through the building to Strawberry Alley. This third basement was occupied by mechanical equipment and an ash tunnel leading in front of the boilers to an ash hoist at Strawberry Alley.

The building has a structural steel frame with floors on a concrete base laid on terra-cotta arches. The shipping platform, along Strawberry Alley, is of concrete; the first floor of the main store, including that portion of the first floor of the "Power building" that was lowered, is of marble; the second and third basement floors, laid on the natural ground, consist of concrete slabs from two to three feet thick; all other floors are surfaced with wood.

The building, previous to making the additions and alterations, was equipped with six passenger elevators along the westerly or Duquesne Club wall running from the first to the twelfth floor, seven passenger elevators near the northerly side running from the first basement to the twelfth floor, three employees' elevators running from the mezzanine to the twelfth floor, two freight elevators running from the first basement to the twelfth floor, three freight elevators running from the shipping platform to the twelfth floor, double-run escalators running from the first to the sixth floor, and a single-run escalator from the sixth to the seventh floor. The store had two main entrances (one at the center of the Sixth Avenue or southerly front, and one at the center of the Smithfield or easterly front) and two auxiliary entrances (one on Sixth Avenue at the southwesterly corner, and one on Smithfield Street at the northeasterly corner). The entrances to the power-plant were from Strawberry Alley at the northwesterly corner, and through a tunnel under Sixth Avenue from the Henry W. Oliver building.

The power-plant was of exceptional size for one located in an office or store building. It furnished light, heat, power, and refrigeration to the Henry W. Oliver building of 25 stories; the Kaufmann and Baer Company store of 12 stories; and the McCreery & Company store of 12 stories. It also furnished light and power to the Chamber of Commerce building of 16 stories; the Meyer Jonasson & Company store of six stories; the Hardy & Hayes building of seven stories; Trinity Episcopal Church; the First Presbyterian Church; the Women's Exchange building of six stories; the Ritz Theater building

of four stories; Reymer's store; several buildings on Fifth Avenue, and an emergency power line to the Press building on Oliver Avenue.

In 1926, an agreement was made whereby the Allegheny County Steam Heating Company would take over the heating, and the Duquesne Light Company the lighting and power loads carried by the old power-plant; the Byllesby Engineering and Management Corporation would remove all equipment of the power-plant; and the owners, the Henry W. Oliver Estate, would make extensive alterations and additions to the building to provide more sales space for the Kaufmann and Baer Company, which would pay additional rental for the added space and facilities.

Upon the conclusion of these agreements the above named companies started preparations to take over the load, for it was necessary that this should be done before the old plant could be put out of service. As a preliminary step towards the abandonment of the old plant it was necessary to install power equipment in some of the buildings that had been supplied by this plant. In the McCreery & Company store there were installed two 200-kilovolt-ampere motor-generators and a refrigerating plant, together with panel-boards and such other auxiliary equipment as was needed.

Identical equipment was installed in the Hardy & Hayes building as was needed.

In the Henry W. Oliver building there were installed two 400-kilovolt-ampere and one 200-kilovolt-ampere motor-generator sets and a refrigerating plant, together with panel-boards and such other auxiliary equipment as was needed. Each of the 400-kilovolt-ampere motor-generators weighed 13 tons, and it was necessary to cut an opening in the sidewalk and in the first-basement floor in order to get them into the building. As it happened, however, the season for heating passed before the transfer was completed, so with the lighter load it was possible to begin the work of dismantling before the entire load could be transferred.

The power equipment that was removed is very fully described in a paper of 18,000 words prepared by Mr. William G. Boyle and read at a meeting of this Society some years ago.* Briefly described, it consisted of the following:

*Not published. A typewritten copy is in the Carnegie Library of Pittsburgh.

1. Six batteries of water-tube boilers having a total rating of 3350 horse-power, each battery being made up of two boilers equipped with chain-grate stokers.

2. A single steel stack accommodating all boilers. This was 10½ feet in diameter and before its extension was 222¼ feet high above the boiler-room floor.

3. Two horizontal, cross-compound, non-condensing Corliss engines, each rated at 1200 horse-power, direct connected to 800-kilowatt generators; one horizontal, cross-compound, non-condensing Corliss engine rated at 900 horse-power, direct connected to a 600-kilowatt generator; one vertical, cross-compound, non-condensing Corliss engine of 900 horse-power, direct connected to a 600-kilowatt generator; one vertical, cross-compound, non-condensing Corliss engine rated at 900 horse-power, direct connected to a 375-kilowatt generator; two horizontal, simple, non-condensing engines rated at 600 horse-power each and each direct connected to a 400-kilowatt generator.

4. Miscellaneous equipment consisting of feed-water heaters and pumps, fuel and ash conveyors, switchboards and other electrical appliances, and an overhead traveling crane for use in handling machinery.

5. A refrigerating system built in duplicate, sufficient to cool 600 gallons of water per hour from 85 to 35 degrees F.; to cool to an average temperature of 35 degrees 15 refrigerator boxes with an aggregate space of 3500 cubic feet; to freeze 75 carafes daily; to cool to 15 degrees a fur-storage room having a capacity of 26,000 cubic feet; to cool 800 gallons of drinking water per hour from 86 to 35 degrees; and to freeze three tons of distilled water per day.

In dismantling the plant, all boilers, engines, generators and other machines were burned apart and destroyed for all purposes, except scrap. It was considered more economical to do this than to salvage the machinery. The labor element was largely an issue in coming to this decision. Had the machinery been salvaged, it would have been necessary to use skilled artisans on this work.

While the Allegheny County Steam Heating Company and the Duquesne Light Company were preparing to take over the load of the power-plant, the owner was preparing plans for the additions and

alterations so that this work could be started even before the dismantling should be completed. Briefly outlined, the additions and alterations to be made consisted of the following items:

1. Install three new passenger elevators along the westerly wall, one running from the second basement to the twelfth floor and two from the second basement to the roof. Two were extended to the roof to serve the WCAE broadcasting station which is located in one of the rooms adjacent to the rest room, on the roof of the main building.

2. Install one new freight elevator at the northwesterly corner of the building, running from the third basement to the loading platform, to handle packages from the sorting tables, located below a spiral chute, to the shipping platform.

3. Extend the run of one freight elevator, terminating at the shipping platform, to the third basement. This makes two elevators available for handling packages between the sorting tables and the shipping platform.

4. Extend to the second basement the run of three of the passenger elevators originally terminating at the first basement.

5. Install a single-run escalator, running from the first to the second basement.

6. Remodel the stairway at the northeasterly corner of the building, extending from the first floor to the second basement. This was done to furnish a stair with an easier pitch.

7. Remove one stairway leading from the main aisle of the first floor to the first basement.

8. Remodel one stairway leading from the main aisle of the first floor to the first basement.

9. Build a new stairway near the rear end of the main aisle of the first floor, extending to the first basement. This stairway is alongside the escalators running from the first to the mezzanine floor.

10. Remove stairways extending from the first floor to the second basement near the Smithfield Street entrance.

11. Remodel stairway at the southwesterly corner of the building, extending from the first floor to the first basement.

12. Install new stairways extending from the first floor to the third basement alongside the western wall adjacent to the freight elevators.

13. Remove a section of the first basement floor near the center of the building to make a well opening about 46 by 68.5 feet.

14. Build two new stairways leading from opposite sides of the well hole to a common landing and extension to the second basement, and under this build a new stairway to the third basement.

15. Close openings, left for escalators, in first floor and first basement floor near the northerly side of the building.

16. Build a new entrance to the first floor and to the first basement, including a new stairway leading from the street at Smithfield Street and Sixth Avenue to the first basement.

17. Lower to the first floor level of the main store (a distance of 25 inches) that portion of the first floor of the old "Power building" remaining at its original level, and replace the old wood floor with marble.

18. Install a new first floor in the northwesterly panel, which had been omitted in the original structure, for an entrance to the power-plant and for ash-handling devices.

19. Install a new first-basement floor in that portion of the building occupied by the power-plant, an area of about 18,000 square feet.

20. Change that portion of the second-basement floor occupied by the refrigerating plant, raising it to the level of the rest of this floor (an area of about 2800 square feet to be raised a distance of about 26.5 inches).

21. Install, where necessary, new second-basement floor in that part of the building occupied by the power-plant (an area of about 18,800 square feet).

22. Enlarge the third-basement floor by removing engine foundation and existing floors of concrete, rebuilding these at lower levels, removing concrete ash tunnel, lowering column footings and outside retaining walls where necessary.

23. Cut hole in old third-basement floor and build new floor at lower level to provide necessary head room for the transformer vault.

24. Remodel the ventilating system, including the installation of new ducts and fans where needed.

25. Remodel the cash-carrier system as necessitated by the removal of the cash room from the first to the second basement.

26. Install a new refrigerating plant in the third basement.

27. Make extensive changes in the plumbing, including the building of new toilets in the third basement and on the eighth floor and the moving of the soda fountain from the first floor to the first basement.

Plans were prepared and contracts let so that the actual work of making the additions and alterations was started early in February 1927, and carried through to completion, with a few minor exceptions, before the end of the year.

To those familiar with construction work, on which so many interests are involved and so many trades engaged, it will be clear that this was no easy task, especially when this work had to be done without interrupting the operation of the store. Contractors had to work at a disadvantage in order that the work of other contractors might not be delayed. Much credit is due to the Superintendent placed on the work by the owners, to harmonize the work of the various trades in order to prevent delays.

There were many items of unusual interest in connection with this work, among which the following are notable:

The Structural Steel Frame. The structural steel frame for the power building was furnished by the John Eichleay, Jr., Company, the tower and trusses for erecting the stack by the Fort Pitt Bridge Works, and the frame for the main store by the McClintic-Marshall Company. Though the working drawings were available it was difficult, in places, to tie in from one set to another. While the contractor was required to check all dimensions in the field, he relied to too great an extent upon the dimensions shown on the plans with the result that many beams had to be cut or reframed in the field, which led to unnecessary expense and caused delay.

The installation of the new elevators made it necessary to reframe the steel on all floors in the panels where they were located. In order not to interfere with the operation of the store, barricades

of beaver boards were erected around the areas where it became necessary to remove the terra-cotta arches and floor and reframe the steel. Some of the new steel members were attached to spandrel beams built into the outer walls of the building. These members could have been connected by welding, but since welding structural steel frames has not been approved by the City of Pittsburgh, these connections were made with tap bolts. This eliminated the necessity of cutting through the outer walls and of working from the outside.

No complete drawings were found for the steel frame in the penthouse which inclosed the cantilever trusses used in erecting the stack, and this made it difficult to frame the new steel for the elevator supports, fans, and other apparatus installed in this penthouse. Much of the old bracing was removed and in one place a panel of the web-plate of a girder was burned out to provide a passageway from the machinery platform of one elevator to that of the adjacent one. In some places in the old power-plant unrecorded changes had been made in the steel framing. Here it was necessary to add new framing not contemplated in the original plans for alterations and additions.

On the plans for the old "Power building," columns were numbered from 1 to 29, inclusive, and on the plans for the main store from 1 to 88, inclusive. To avoid confusion, 100 was added to each column number in the old "Power building" in making the drawings for the alterations and additions.

Replacement of Girder from Column 115 to Column 122. Column No. 115 was offset at the first floor, the upper part resting on a girder, directly under the first floor, extending from the lower section of column No. 115 to column No. 122. The amount of this eccentricity was 18 11/16 inches. This girder was located under that part of the first floor of the old "Power building" to be lowered and it was found that, if left unchanged, it would project about 16 inches above the floor level at a place seriously objectionable. It was, therefore, decided to remove the old girder and substitute a new one of a depth that would not project above the floor. On account of the heavy load, estimated at 606 tons, it was necessary to give special consideration to the design of the girder. Two web-plates, each 30 inches by 7/8 inch, were used, and these had their edges planed and set flush with the backs

of the flange angles so that the load would not have to be transmitted to the webs through the flange rivets. In addition to the web-plates, four side plates were used on the outside faces of the flange angles, and these were planed to a tight fit between the outstanding legs of the flange angles. This arrangement placed the flange rivets in quadruple shear.

In order to remove the old girder and place the new, it was necessary to support column No. 115 above the first floor while the change was being made. This was done by fastening steel brackets on two sides of the column to transfer the load to needle beams which were supported by a timber tower extending to the third-basement floor. By means of hydraulic jacks and wedges the load was transferred to its temporary support and kept there until the new girder was ready to receive its load.

A considerable difficulty was experienced due to the use of timber towers. In framing the timbers the ends had not been resawed and there was a considerable amount of settlement in the tower which had to be corrected from time to time by adding wedges. In its final adjustment, column 115 above the first floor was left ½ inch below its original position. In attaching the brackets to the column the connecting angles were punched to fit the rivets in the column. All rivet heads under the brackets were removed, leaving the shanks of the old rivets to hold the plates and angles of the column together until the brackets should be riveted in place. Following the removal of the rivet heads, the brackets were placed and the shanks of the old rivets driven or drilled out a few at a time and new rivets driven. This method held the separate parts of the column together during the operation. After the new girder was placed and the load transferred to it, the projecting parts of the brackets were burned off, leaving the connecting legs of the bracket angles on the column, so that it should not again become necessary to remove rivets from the column.

Removal of Additional Girders. Column No. 73 was offset at the first-floor level, the upper portion being carried on a girder between columns 73 and 74, column 75 being carried on a girder between columns 74 and 75. These two girders were six feet deep and extended down so far below the first floor as to spoil a large section of the space in the first basement. It was desired that these

should be removed without disturbing the marble floor above, which would be expensive and would seriously interfere with the operation of the store. The following method was adopted. New columns were erected on new foundations directly under the upper sections of columns 73 and 75 to relieve the girders of bending stresses due to the column loads, after which the lower sections of old columns 73 and 75 were removed. The bottom flange and the web up to within 13½ inches of the top of each girder were then burned out and a new flange attached to the remaining part of the web to provide a girder of sufficient strength to carry such floor load as came directly upon it. The column load was then transmitted through the remaining portion of the girder and its stiffener angles to the new column upon which it rested. In order to prevent any tendency to rock over, stiffening members were added to the opposite sides of each of the new columns and extended up past the girder, to which they were attached. While this made a rather bulky column in the first basement, it accomplished the desired results. No difficulty was experienced on this work in the field.

Removal of First-Basement Floor. The opening cut in the first-basement floor on two sides was along column center-lines, but on the other sides was midway between column lines where it was necessary to insert new fascia girders to carry the remaining portions of the otherwise unsupported floor panels. This opening left four free standing columns in the area of which the unsupported length was changed from one to two stories, and on this account it was necessary to reinforce them. Two new plates were added to the web of each column extending from the second-basement floor to the first floor. While this reduced the radius of gyration of the columns, it was the most economical way in which to reinforce them.

There were objections to placing columns in the second basement to support the fascia girders and there were also objections to extending supporting beams to the columns within the opening, and the first-floor beams were not strong enough to carry hangers to support the fascias, so new beams were placed close to the first floor, and hangers were suspended from these beams to carry the fascia girders. No other unusual problems occurred in connection with the structural steel work other than those connected with the underpinning, and they will be taken up in that connection.

Lowering the First Floor. It was at first intended to lower the first floor of the old "Power building" without interrupting commercial use of the floor or disturbing the floor itself except around the columns, and the specifications were so drawn; but when it was decided to replace the wood floor with marble the plans were changed and the floor stripped to the tile arches before lowering. This was done in two operations instead of one as at first proposed.

The lowering of this floor was not undertaken until after the new first-basement beams were placed so that these could be used to carry the shoring. An elaborate system of shoring was prepared by the contractor, and about three weeks spent in installing this shoring. Almost immediately after starting to lower the first section, 19 jacks out of a total of 24 broke. The shoring toppled over and let the floor fall about two inches to blocking that had been placed on the new supports as a precautionary measure. A serious accident was averted by the foresight of the superintendent in placing the blocking. As soon as the old shoring could be removed, another type, known as "pump logs," was adopted and the floor lowered promptly and safely.

Raising the Second-Basement Floor. The raising of the second-basement floor under the old refrigerating plant was a simple operation. The floor girders rested on brick piers alongside the column footers, so it was necessary only to jack up the girders and build the piers up to the required level.

Underpinning Columns 117-119. Enlarging the third basement took the excavation below the bottom of the footers for columns 117, 118, and 119, and on this account it was necessary to lower these column footers. Temporary concrete footers were built at each corner of the old one and taken down to a level just below the proposed foundation for the new. These were made of early high-strength concrete, the same as specified for the permanent parts of the work. Upon each pair of temporary footers, there were placed two 30-inch, 200-pound rolled-steel beams, and upon these on either side of the column were placed another pair, and upon these rested brackets attached to the columns as in the case of column 115.

Provision was made for placing hydraulic jacks under each of the two lower pairs of beams to pick up the load and to adjust the column at its correct elevation in case of deflection in the beams or

settlement of the footers. Between each pair of beams, timbers were carefully fitted to their shapes and then the beams were bolted together, using stiffener angles carefully fitted between the flanges on the outer side, thus providing against buckling of the webs. After the column load had been transferred to the temporary footers, the old footer was removed, excavation made, and a new footer built at the lower level. The old column shoe was removed, and a new section of column and new shoe introduced to extend the column to its new footer. After the base course of the footer was placed, jacks were used to transfer some of the load to it in order to reduce any settlement that might occur when it received its full load. As in the case of column 115, after each column load was on its new footer, the needle beams were removed and the brackets burned from the columns. The final closing in between the new grillage and its concrete base was made of concrete, using small-size coarse aggregates in accordance with the specifications of the Engineers' Society of Western Pennsylvania. In the footer for the first of these columns this grout, through an oversight, was made in the same proportions as when using medium-size aggregate, with the result that the concrete did not develop the specified strength. Its crushing strength at 24 hours was 538, at 48 hours 849, and at 72 hours 1020 pounds per square inch, or practically one-half of the specification requirements. As frequently happens, the wrong thing was done where the conditions were worst, but fortunately no serious results occurred. The contractor, without permission or authority, let the column load down on this concrete when only one day old. The mix was changed for the other two columns and this concrete tested 2830 pounds in three days, 3669 pounds in seven days, and 3136 pounds in 28 days. Each of these three columns showed a little permanent settlement, the maximum amount being about ⅜ of an inch.

Concrete Work. When the specifications were drawn, it was known that the ground-water level at this site responded to the water-level of the Allegheny River and that ground water would reach approximately the same elevation, but that the rise would occur about three days later. A study of the chart of the water-levels of the Allegheny River from 1920 to 1926, inclusive, indicated that high water

might occur at any time during the year. Since the floor level of the third basement is only 3.3 feet above pool level and the lowest excavation reached eight feet below poor level, difficult water conditions were anticipated and specifications were drawn for an early high-strength concrete. Since at least three days advance information could be relied upon, the specifications were drawn requiring a strength in 72 hours of at least 2000 pounds per square inch, as determined from six-inch by 12-inch test cylinders.

This quality of concrete would permit the closing of a hole in the floor in time for it to resist the buoyancy of the water when the rise reached the site. As the work progressed it was found that the water could be held down by pumping, so no further effort was made to limit the floor area taken up at any time. Fortunately no great rise in the river occurred until near the close of the work. Immediately before the work was finished a water-gage was installed for the City of Pittsburgh near Strawberry Alley with an opening in the floor of the shipping platform, and with its lower end under the third-basement floor 6.65 feet below pool level.

The mix was not definitely fixed, but a 1 : 1½ : 2½ mix was recommended. Portland cement, in accordance with specifications of the American Society for Testing Materials, was required. Sand was to be coarse. Gravel used in walls, pits, foundations and floors, except finish, coarse; and gravel in reinforced slabs and floor finish, fine, in accordance with the specifications of the Engineers' Society of Western Pennsylvania. Water was limited to not more than six gallons per sack of cement, including the free water contained in the sand and gravel. The addition of calcium chlorid was required, in an amount equal to two per cent. of the cement, by weight. This was done by making a 50-gallon solution with 100 pounds of calcium chlorid and then substituting one gallon of this solution instead of water for each sack of cement. Batch mixing was required with the time of mixing fixed at between three and five minutes. The specifications required a temperature of the concrete when placed of at least 90 degrees F., but this was changed to 90 degrees at the time of removal from the mixer.

The conditions at the site were exceedingly unfavorable for securing a concrete of the uniform high quality specified, so there was

a feeling of relief when the contractor decided to use ready mixed concrete. This was mixed in batches of three cubic yards each at South Twenty-second Street near the Monongahela River and trucked to the site, generally at night. During the day, traffic was too congested in Strawberry Alley to make it practicable to deliver concrete there; furthermore, the work going on in the basement—removing old concrete, old machinery, etc.—made it practically impossible to place concrete in daytime.

An inspector was placed at the mixing plant to record the amount of materials, the time of mixing, and the time and temperature when removed from the mixer. He gave the driver of the truck this information on a sheet which was taken up by the contractor upon delivery at the work. These sheets were turned over to the engineer and filed. A record of the time of delivery was made at intervals showing that the time in transit would seldom exceed ten minutes.

Test cylinders were made at intervals and the average of these tests showed a strength of 2143 pounds at three days, 2543 at seven days, and 3255 at 28 days.

A striking incident occurred at the time the first delivery was made. The maker of the concrete evidently desiring to do a little better than required by the specifications, cut the amount of water below that allowed, with the result that the first truck load stuck in the hopper at the dumping platform and required 1½ hours with the aid of picks, shovels, and water to clear the hopper. In the meantime two more loads arrived at the site. After waiting a short time these were sent away. One of these was returned to the plant, where after three days it was removed from the truck by inverting the truck and building a fire under it. What became of the other load is not known to the writer, but about this time there appeared a suspicious looking lump of concrete on the bank of the Allegheny River.

The uniformity of the material (which was easily controlled at the mixing plant) and the satisfactory results obtained, justified the use of ready mixed concrete on this work. It would have been difficult, without much expense, to have secured as good and uniform results by mixing at the site.

Transformer Vault. Following the adopted plan of procedure it was necessary to install the new transformer room as soon as pos-

sible in order that the mechanical load might be taken over by the Allegheny Steam Heating Company before the old equipment should be completely put out of service; consequently the machinery on the proposed site was first wrecked, and its foundations removed. Following this, and while the work of wrecking the machinery and removal of foundations was continued, a hole was cut in the third-basement floor, an excavation made to the required depth, and a new floor installed for the transformer room. In making this excavation it was necessary to install a pump to keep the water down so men could work. The excavation was in sand and gravel, with the major portion gravel.

While pumping, water flowed freely across the excavation, which resembled a creek bed. As soon as the excavation was completed, the new concrete floor was poured except for an opening at the sump which was to be closed later. Pumping operations were continued steadily to prevent a rise of water-level.

A very good plan had been prepared to close the sump and to prevent upward pressure on freshly poured concrete. A steel plate having a rectangular opening for the suction line was built into the new floor. This was equipped with a hinged cover, opening downward, having a ring for use in closing. Immediately upon removing the suction line the cover was to be closed and the hole in the floor filled, but unfortunately some gravel got into the opening and prevented its closing. In making a final effort to close the cover the ring was pulled out, so that it was then necessary to abandon the entire scheme and pour concrete around the suction line, and later close this pipe. A mistake was made by placing the sump within the area of the space to be floored over. Sumps were required all through the work, and had this one been placed properly time and expense would have been saved.

Removal of Machinery Foundations. The foundations of old engines and other machinery were of concrete and in general were placed on the third-basement floor, which was 10 feet below the floor of the power-house or second-basement floor. They were large and had to be drilled and blasted. When blasted they broke through construction joints into pieces too large to handle; these pieces were

broken still smaller by the use of mauls or drills and wedges. These foundations were removed to about two inches below the third-basement floor in order to give a reasonable thickness to a new floor finish to be placed later.

Removal of Concrete Floors. The concrete floors to be removed were mainly those of the second basement where they were placed directly upon the natural ground. The old ash tunnel, having an opening 10 feet wide and eight feet deep, formed a retaining wall alongside the third basement. When this was removed, enough of the third-basement floor was taken up to make a good joint with the new floor when placed. The old floors were assumed to be three feet thick, but many old foundations were encountered which added greatly to the volume of concrete removed. The actual amount averaged nearly six feet instead of three. The amount removed was about 50,000 cubic feet.

The concrete in the floors was broken up by blasting and wedging as was done in the case of the engine foundations. In general, blasting was done at night, when the store was not occupied. The concrete in the old "Power building," including the pedestals for columns 117, 118, and 119, was tough and difficult to remove. The concrete floors, other than for the transformer room, were removed in the summer, when high water does not occur very often, and practically all were removed and all excavations completed before any of the new floors were placed.

Underpinning of Walls. The underpinning of the walls was undoubtedly the most important piece of work of all the alterations. The wall for about 137 feet along the Duquesne Club and 40 feet along Strawberry Alley was underpinned. It was lowered from six feet in some places to 15 feet in others. The method by which the underpinning should be done was not fixed in the specifications, but was left to the contractor, subject to the approval of the architect and the engineer. The method proposed by the contractor was accepted, with some modifications.

Recesses were cut into the concrete retaining walls and in these recesses steel girders were placed, spanning from column to column. Brackets were attached to the columns to transmit the column loads

to the girders. After the girders and brackets were placed, wedges were driven under the girders between them and the old concrete, and then the space in the groove below the girders was filled with a dry pack, made of sand and cement and driven into place with a maul. When this was done, a portion of the column loads could be safely transmitted to the spandrel walls. Later, the space behind and in front of these girders was filled with concrete, completely embedding them in the wall. When excavating for the underpinning, sections of about five feet each were opened, alternately. In excavating, sheeting of two-inch plank was used; this was of a patented type having the rear top corner and front bottom corner cut so that packing could be introduced back of the sheeting through the louver openings, between the boards. As the holes increased in depth other boards were placed below until the hole had reached its final depth. The base course of the footer was then poured, and in this 15-inch steel grillage beams were placed at one-foot intervals flush with the top of the base course. The bottom of the old wall was cleaned and other steel beams inserted with one end against the old concrete and with the other on the grillage beams; these were wedged to throw initial load on the base course before filling the hole with concrete. The final closing in between old and new concrete was made by dry packing.

The plans and specifications were prepared by, and the work executed under the direction of:

James P. Piper, Architect.
William G. Boyle, Mechanical Engineer.
Charles Stratton Davis, Structural Engineer.

Other representatives of the owner were:

Henry Kropff, Architect.
William J. Charles, Superintendent.
F. A. Hopper, Architect's representative on the work.
George McElroy, Assistant Mechanical Engineer.

The contractors were:

Foundations and underpinning—Underpinning and Foundation Company.
Structural steel work—McClintic-Marshall Company.
Structural steel erection—J. L. Mullen Construction Company.
Elevators and escalators—Otis Elevator Company.

Ornamental iron and bronze—W. S. Tyler Company.
Rolling steel doors—Kinnear Manufacturing Company.
Freight elevator doors—The Peelle Company.
Kalamein doors—Frank Limbach.
Metal doors and windows—O. H. Nelson.
Revolving doors—Van Kannel Revolving Door Company.
Hand railing—Pittsburgh Finish & Stair Company.
Millwork—Wilson Cabinet Company.
Lath and plaster—Dougherty & Jennings.
Terra-cotta—Conklin-Armstrong Terra Cotta Company.
Marble and tile—American Marble Company.
Terrazzo floors—Patrizio Art Mosaic Company.
Sheet metal and roofing—Perritt Iron & Roofing Company.
Painting—Julius C. Gulden.
Glass and glazing—Pittsburgh Plate Glass Company.
Granite—Colwell Granite Company.
Plumbing—George H. Soffel Company.
Heating and ventilating — McGinness, Smith & McGinness Company.
Low-tension electric work—Carter Electric Company.
High-tension electric work—Franklin Electric & Construction Company.
Sprinkler system—Grinnell Company, Inc.
Refrigeration—Barrett Machine Company.
Pneumatic tubes and conveyors—Lamson Company.
Motor-generators—General Electric Company.
Switchboard equipment—Cutler-Hammer Manufacturing Company.
Masonry, concrete, carpentry, cork tile, rubber tile, and finish hardware—Henry W. Oliver Estate.

This list of contractors in itself is sufficient to make it clear that it was no small job to co-ordinate all forces, scattered from the roof to the third basement, and keep the work of one contractor from being blocked by another and to complete the work within 10 months after starting.

DISCUSSION

C. N. HAGGART:* What was the composition of that "dry packing" to which you referred, and how is it applied?

C. S. DAVIS: That was made of sand and cement with enough water so that when pinched in the hand it would stick together like a snowball. It was then placed and packed tight by means of a stick, say 2 by 4, and a maul.

M. L. SMITH:† Mr. Davis, in supporting loads as heavy as 600 tons, I note that wooden bents were used. Do you think wooden bents were the most economic method to use?

C. S. DAVIS: I am not prepared to answer that.

M. L. SMITH: Is that practicable?

C. S. DAVIS: I think it is practicable, and all right if it is properly done. I said that these timbers were not resawed. Timbers taking as heavy loads as those should have resawed joints. I do not know whether you know what I mean by that, but in old timber bridge work all joints had to be resawed; that is they would be cut to the required length or a little more and the ends brought tight together and a saw would then be run through the joint. Then when the ends were brought up tight there would be contact throughout the entire area. I think it would have been better to have these timbers resawed.

G. H. HUTCHINSON:‡ You spoke of a slab floor two or three feet thick. That was above flood level, was it not?

C. S. DAVIS: No, the old three-foot floor was on the old third-basement floor level, which was about 1½ feet above pool level.

*Consulting Structural Engineer, Pittsburgh.

†Engineer, Contract Department, Fort Pitt Bridge Works, Pittsburgh.

‡Assistant Designing Engineer, Bureau of Bridges and Structures, City of Pittsburgh, Pittsburgh.

G. H. HUTCHINSON: I wondered if it were below flood level, how you provided water-tight joints, as I understood from the description that the floor was laid in blocks involving joints which would be likely to permit leakage.

F. M. MCCULLOUGH:* I understand that your floor slab was below flood level. Did you reinforce the floor for the upward pressure of the water, and how did you make the floor slab water tight?

C. S. DAVIS: No, it was poured as a monolith. We have been watching the water-level since that gage was established there and by pumping we can keep the water-level at the gage about 13 feet below flood level in the Allegheny. We gain that 13-foot differential by pumping, and in designing the floor slabs it was considered safe to count on that differential.

H. H. CHIDESTER:† Did you reinforce the slabs?

C. S. DAVIS: Some of them were reinforced and some were not.

H. H. CHIDESTER: I would like to ask a question as to the method of ventilation; how it was taken care of in those sub-basements. Was the air introduced from outdoors or from the upper stories?

C. S. DAVIS: I am not able to tell you definitely where the intakes were located. I know there was one on Strawberry Alley, about 12 to 15 feet above ground level, and I think there were some on the Sixth Avenue side; but the fresh air was all taken from the outside, generally through openings in the store walls.

H. H. CHIDESTER: Was provision made for taking out the foul air?

C. S. DAVIS: Yes. You know the store had a ventilating system to begin with, but, on account of these additions to selling space,

*Professor of Civil Engineering, Carnegie Institute of Technology, Pittsburgh.
†Consulting Engineer, Erie, Pa.

it was necessary to revamp the entire ventilating system. New fans were placed in the basement and new ducts were built from the basement clear to the roof and the exhaust was through the roof.

G. A. SAEGER:* You stated that the concrete was designed to have a strength of 2000 pounds at three days and your tests show the average strength at three days to be a little over 2100 pounds. Were these cylinders made out of concrete as delivered to the job?

C. S. DAVIS: Yes.

G. A. SAEGER: The average value of 2100 pounds per square inch consisted of possibly how many tests?

C. S. DAVIS: I think about a dozen.

G. A. SAEGER: At the time that concrete was being placed, the Crescent Portland Cement Company had the Standard Inspection Company make a considerable number of cylinders from a typical batch. It may be of interest to mention the results obtained. It was not exactly representative of all the concrete that was delivered to the job. The Standard Inspection Company made, approximately, 48 cylinders from one batch as delivered to trucks from the Ready Mixed Concrete Company's three-yard mixer. The slump was less than four inches. I have the results of this test with me, and they are as follows:

At three days on this particular series of tests the average compression strength was 3474 pounds, which is considerably higher than the average of the cylinders that were obtained at the building itself. Very good care was taken of the cylinders. The cylinders were stored in damp sand at the plant and not moved for 24 hours, then taken to the laboratory and stored in damp sand until the time for testing.

Many factors, such as temperature, humidity, etc., affect the early strength tests of concrete cylinders. Considerable care was used in transporting the cylinders to the laboratory, where they were stored in damp sand. Three cylinders were broken at each period. The average value at the end of 24 hours was 1948 pounds per square inch. At

*Chemical Engineer, Crescent Portland Cement Co., Wampum, Pa.

two days, the average of three cylinders was 2902 pounds; at three days, 3474 pounds; at seven days, 3805 pounds; and at 28 days, 4492 pounds. There still remain several cylinders to break; it being our plan to break the remaining specimens at the end of one year, and if you are interested I will give you the results at that time.

No doubt these results are a little above the average, due to the small slump. All the cylinders were taken care of in laboratory fashion, which vitally affects the strength, and I doubt whether cylinders made at the job could have been so carefully handled. Although you got an average of 2100 pounds at three days, your concrete in place was no doubt considerably higher than your tests show. Don't you think that would be the case?

C. S. Davis: I don't know. The tests we made came from a wider range of mixes than yours, and was an average over a wider range. Some of ours closely conformed to yours.

G. A. Saeger: It shows that your design of the mix was very good and you obtained what you were striving for. That is a point that is of interest, too.

H. H. Chidester: What cement did you use?

C. S. Davis: "Crescent."

H. H. Chidester: It was not a special cement?

C. S. Davis: No.

H. H. Chidester: Were your cylinders cured on the job?

C. S. Davis: Yes, they were taken by an expert. The first were taken by Mr. Shellmire, who used to work for Mr. Watson of the Pennsylvania Railroad, so I think the samples were very well prepared and very well taken care of.

D. W. Blakeslee:* Mr. Davis has very interestingly covered a number of the many additions and alterations of this tremen-

*Illuminating Engineer, Pittsburgh Reflector Co., Pittsburgh.

dous work, some of them being very amazing. But there are many lesser items, not involving the modulus of elasticity or the radius of gyration which he could not cover for lack of time at this meeting of engineers. It might be well to touch upon one of these changes which is much more obvious to those not civil engineers than most of the changes which have been covered to-night by Mr. Davis.

I refer to the corner entrance and the adjoining show-windows. It was my duty and honor as illuminating engineer to co-operate with the architect in the design of the lighting of this new corner.

No lighting equipment is visible in the corner entrance to the store. Twenty-five 100-watt lamps in scientifically designed mirror glass reflectors, especially selected for this application, are properly located over the ceiling of the island case in the center of the entrance and over the stairway leading to the first basement. These reflectors are so directed as to flood the ceiling of the entrance with light so that this ceiling acts as a secondary light source which uniformly illuminates the entrance.

This main island window is illuminated by 150-watt lamps, equipped with reflectors designed for such an application. Lamps and reflectors of the same size and type as used in the main island case are also employed in the two small windows each side of the island and in the window between the two revolving doors.

The main show-windows at each side of the corner entrance are about twice the depth of the remaining show-windows of the store. These two windows are now representative of the few show-windows in Pittsburgh having the latest modern illumination arrangement. This has been termed a flexible lighting system for show-window illumination. The lighting is accomplished by the aid of two rows of reflectors. In these main windows there are seventeen 150-watt lamps in the row next the plate-glass, and sixteen 100-watt, inside-frosted lamps in the other row. This gives approximately 300 watts per running foot of show-window. Since both of these main windows are lighted from two sides—that is from the street plate-glass and from the entrance plate-glass—the resulting intensity of illumination in the show-windows is of a very high order. The unique lighting feature of these windows is that it was necessary for the illuminating engineer to furnish the architect with design data for the construction

of inclosures for concealing the silvered glass reflectors and for flush mounting them in these inclosures so that the show-windows complete with their lighting equipment would present a harmonious general arrangement.

The reflector near the plate-glass is so designed as to direct most of the light from the lamp within it in a downward direction and to some extent back from the plate-glass. The reflectors in the second row illuminate the show-window farther back and also the vertical surfaces of the back of the windows and the trim within them where it runs to a considerable height.

STUDY OF STRESSES BY MEANS OF POLARIZED LIGHT AND TRANSPARENCIES*

By R. V. Baud†

ABSTRACT

Determining the localized stresses in irregular or complicated objects under load is extremely important to the designer. Unfortunately, mathematical analysis is inadequate for any but the simplest cases, and ordinary tests give information regarding the piece as a whole but no clue as to what takes place at particular points. This is precisely the question answered by the photo-elastic method.

The photo-elastic equipment in the research laboratory of the Westinghouse Electric and Manufacturing Company at East Pittsburgh, Pa., has been in constant use for about five years. As used at present, it consists of a lamp, two polarizing prisms, two mica plates, a system of lenses, a screen, and a photographic camera.

The physical phenomena involved are polarization, interference of light rays, and double refraction of transparent materials under the influence of stress and strain.

The application of light rays necessitates the use of models made of transparent materials such as celluloid, bakelite, and glass. Since within the range of proper working stresses, steel acts precisely as such transparent materials, the information derived from the transparent models applies exactly to the steel object.

Sometimes the mere inspection of the loaded model in the field of polarized light gives the desired information. Often, however, numerical information is required, giving the exact stress conditions at numerous points of the model. In the first part of this paper the physical phenomena will be explained as far as necessary for a correct understanding of the photo-elastic method: the second part will then deal with some of the results obtained and their application to actual design problems.

It will be realized that such work is very helpful to the designer in balancing the two major factors of design—safety and economy.

INTRODUCTION

Machine design to-day can be efficiently and economically carried out only by (1) complete knowledge of the manner in which the

*Presented March 20, 1928. Received for publication July 12, 1928.
†Research Department, Westinghouse Electric & Mfg. Co., East Pittsburgh, Pa.

stresses are distributed, and (2) complete information on the properties of the materials employed. It is with the first of these items, as regards stresses due to external loads that we are here concerned.

The stresses occurring in machine elements can in only a very few cases be obtained accurately by analysis alone. In all of the more complicated cases, numerous assumptions must be made which may or may not be correct. It is in these latter cases that the optical method has its widest application.

This method is based upon two phenomena, (1) polarization of light and (2) double refraction of transparencies, due to stress and strain. The latter phenomenon was first observed in 1815 by Sir J. D. Brewster (Other historical references are given at the end of this paper). Since this method solves problems of elasticity and involves the principles of optics the remarks made in part I may be appreciated.

PART 1

Elasticity. In this discussion we will consider a machine element defined by its contour and two parallel planes relatively close to each other. We will cut out an element with two sides parallel to, and four sides perpendicular to these planes. The considerations shall be limited to stresses acting on the four sides of the element, the lines of action of the stresses being parallel to the two planes. The top view of the element will appear as shown in Fig. 1 by ABCD. The stresses, p_1 and q_1, act-

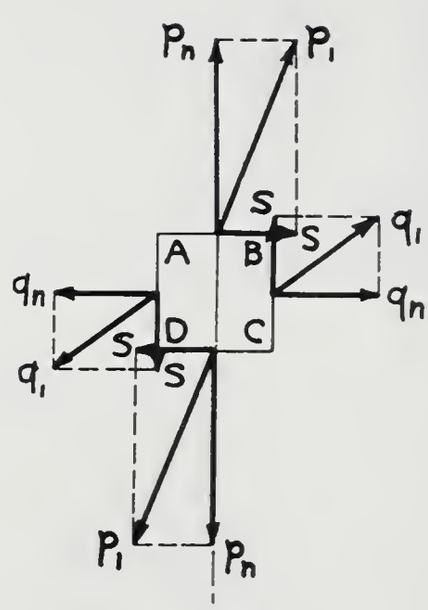

Fig. 1. Stresses Acting on an Element Oriented at Random.

ing on the sides AB, BC, CD, and DA, will in the general case not be perpendicular to these sides, but will be inclined. In such a case the stresses are usually resolved into two components: namely, into the normal, p_n, and the shear component s. (Fig. 1.) There exist, however, two particular positions of the element which are of fundamental importance. One of these positions is characterized by the fact that the normal component p_n has reached a maximum p after rotating the axis of the element through the angle α, the other normal component q_n has become a minimum q, and the shear component has vanished. The stresses p and q are called *principal stresses*; the axes of the element in this particular position are called the *principal stress directions*. (Fig. 2.) The optical method gives the magnitude as well

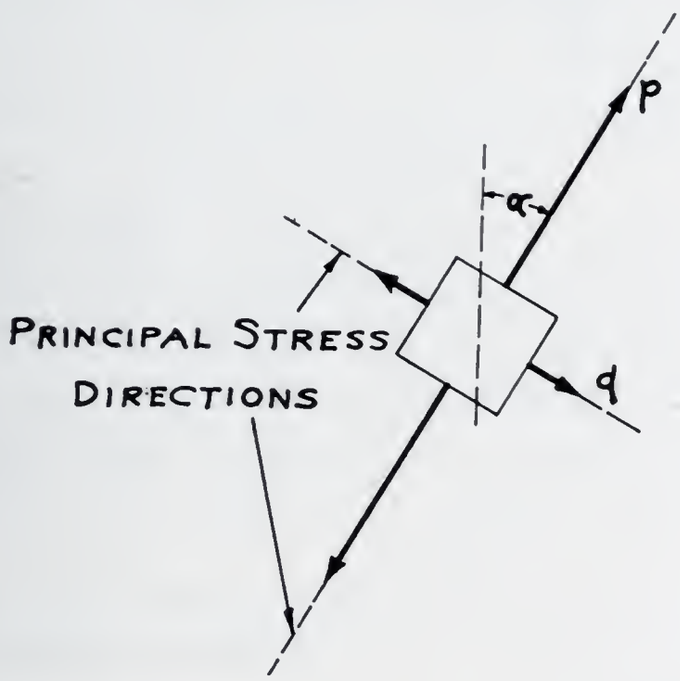

Fig. 2. Same Element as in Fig. 1, Oriented so That p and q Are Principal Stresses.

as the directions of the principal stresses, hence the importance of the definition. The other position for the element is with the axis inclined 45 degrees to the principal directions. (Fig. 3.) For this position all four inclined stresses (p_2 and q_2) are of equal magnitude (Fig. 3), and the shear stress is a maximum depending on the magnitude of the principal stresses p and q, or $s_{max} = \frac{p-q}{2}$. It should be noted that if the optical equipment is composed of the parts ordinarily used, the difference $(p-q)$ is obtained instead of p and q separately.

Optics. Light, according to modern physics, is an electromagnetic disturbance. The magnetic and electric vectors of light rays are

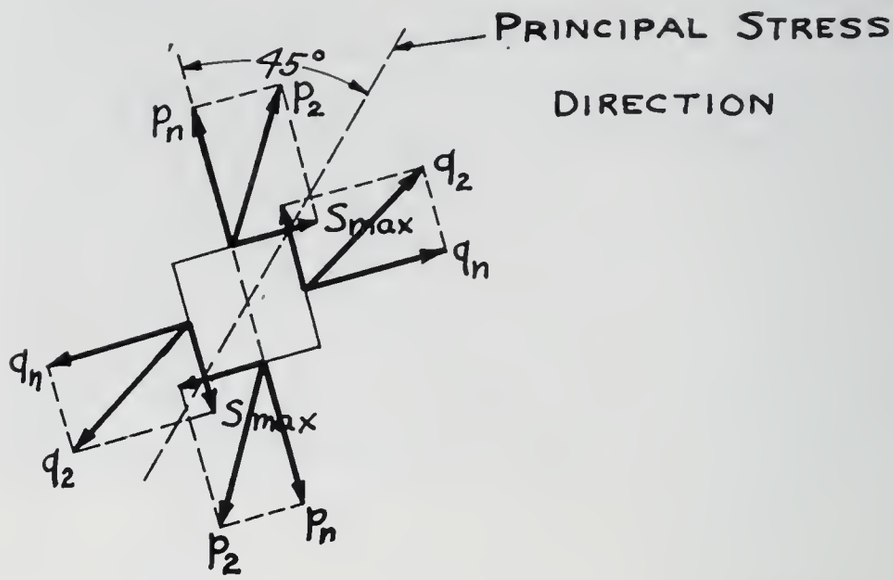

Fig. 3. Same Element as in Fig. 1 and 2, Oriented so That the Shear Stress S is a Maximum.

at right angles to each other and also form a right angle to the direction of light propagation (point O, Fig. 4). In further discussion, only the magnetic vector will be considered and it will be called the light vector. The variation of the magnitude of the light vector is assumed to be sinusoidal. In an unpolarized beam of light, the plane, defined by the light vector and the direction of the light propagation, is oriented at random. (Fig. 4.)

If, on the other hand, the angular position of the plane is stationary or varies, not at random but according to a definite manner, the

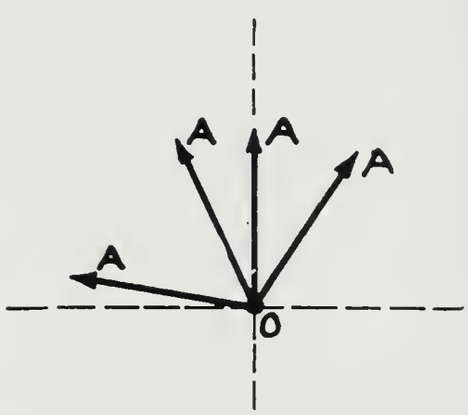

Fig. 4. Unpolarized Light (Represented by Light Vector OA).

light is said to be polarized. If the plane is stationary with a fixed angular position, we have plane polarized light. (Fig. 5.) If the

plane rotates with a constant angular velocity and with the magnitude of the maximum vector remaining constant, its tip describing a circle, the light is said to be circularly polarized. (Fig. 6.) If, however,

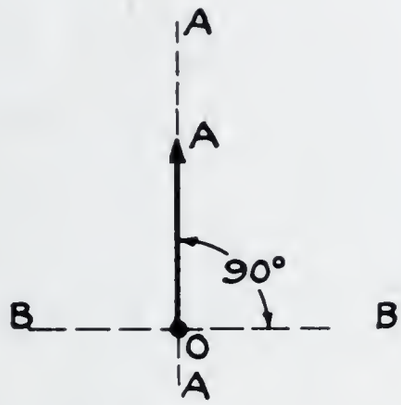

Fig. 5. Plane Polarized Light (Represented by Light Vector OA).

Fig. 6. Circular Polarized Light (Represented by Light Vector OA).

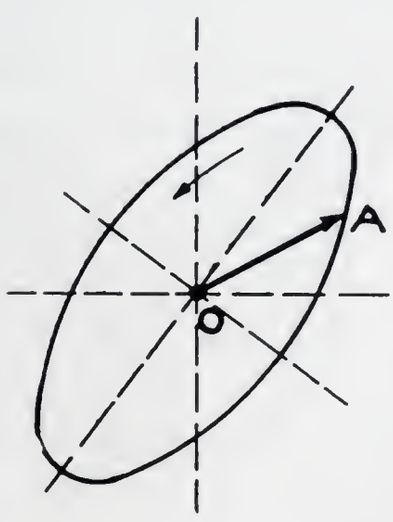

Fig. 7. Elliptical Polarized Light (Represented by Light Vector OA).

with the plane rotating as before, the magnitude of the maximum light vector varies so that its tip describes an ellipse, the light is said to be elliptically polarized. (Fig. 7.) The circle and the ellipse are termed hodographs of the light, a hodograph being the locus of the tip of a rotating vector. Plane and circularly polarized light can be considered as special forms of elliptically polarized light.

Plane polarized light (Fig. 5) can be obtained from ordinary light (Fig. 4) by application of a reflective or a refractive surface, called a polarizer. Such a device resolves unpolarized light into two beams of polarized light, one of which, since undesirable, is absorbed. In the case of the Nicol prism (Fig. 8) oriented so that the mutual

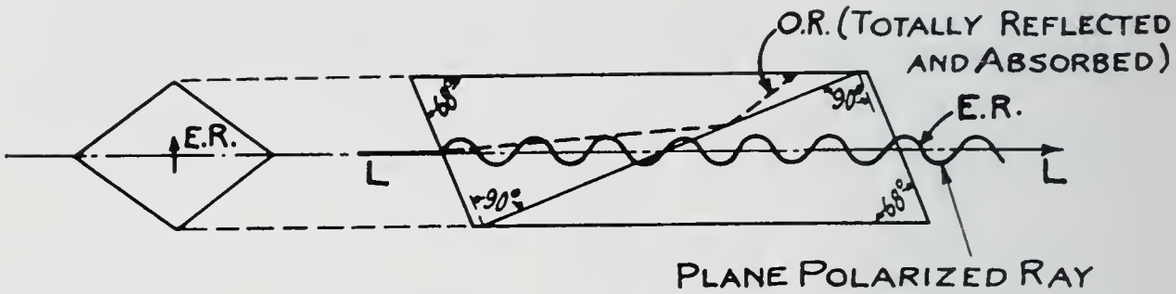

Fig. 8. Nicol Prism and Its Function.

bisector of the two opposite acute angles is horizontal, the rays of horizontal formation are absorbed and those of vertical vibration allowed to pass.

If two Nicol prisms are arranged in series, the first, for instance, placed to produce rays of only vertical formation as in Fig. 8, and the second turned 90 degrees with respect to the first with the line LL as axis, the light of the lamp L is completely damped out. This is true because the second prism allows only the horizontal components of rays to pass, and since the first prism emits rays of only vertical formation, there are no horizontal components. This arrangement is called "crossed Nicols" and forms the basis of the optical set as ordinarily used. The first prism is called the polarizer and the second the analyzer.

When a plane polarized wave (Fig. 5) passes through a mica plate it undergoes certain changes. This is because mica is æolotropic without being subjected to external loads. There are two methods of considering what happens to the light. The first is to assume that the light ray, propagated along one of the three axes of optical symmetry,

and given by the vector OA (Fig. 9) is split into two rays (OB and OC), respectively parallel to the other two axes of optical symmetry. In traveling through the mica, these rays have a slightly different

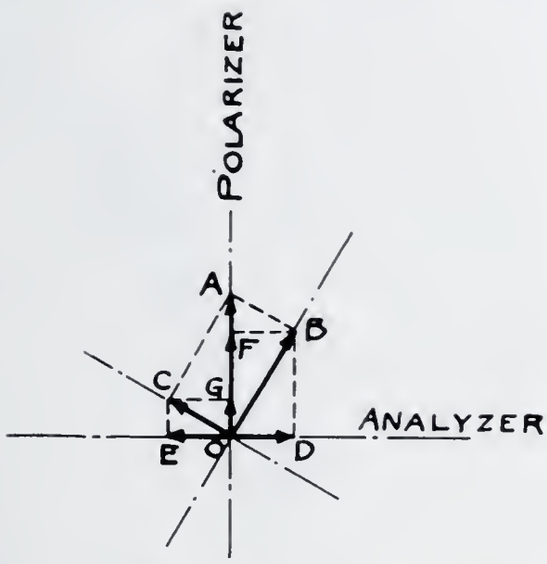

Fig. 9. Effect of Mica Plate Inserted between "Crossed Nicols."

wave length, such that when they leave the mica they have a difference in phase. The magnitude of this difference, in millimeters, is given by $R = t\ (n_2 - n_1)$ where t is the thickness of the mica in millimeters, and n_1 and n_2 the indexes of refraction. The analyzer splits the two rays as shown in Fig. 9, and four new rays of the amplitude OD, OE, OF, and OG, are formed, of which, however, only the rays of horizontal formation, OD and OE, pass through the analyzer. Since they are from the same light source the phenomenon of interference takes place. This phenomenon, in the case in which the lamp emits white light, results in a colored spot on the screen. This is because white light consists, in general, of numerous rays of different wave-lengths and intensities. The light with a certain wave-length is completely damped out, whereas light rays of other wave-lengths have a certain intensity depending on their original intensity and on the magnitude of the retardation R with respect to their wave-lengths. The mixture of the combined light rays of different wave-lengths (color shades) and different intensities results in the color mentioned above.

Instead of assuming that the ray is split, as was done in the first method, we may consider that the plane polarized ray OA (Fig. 9) is elliptically polarized by the mica plate as indicated in Fig. 10, and

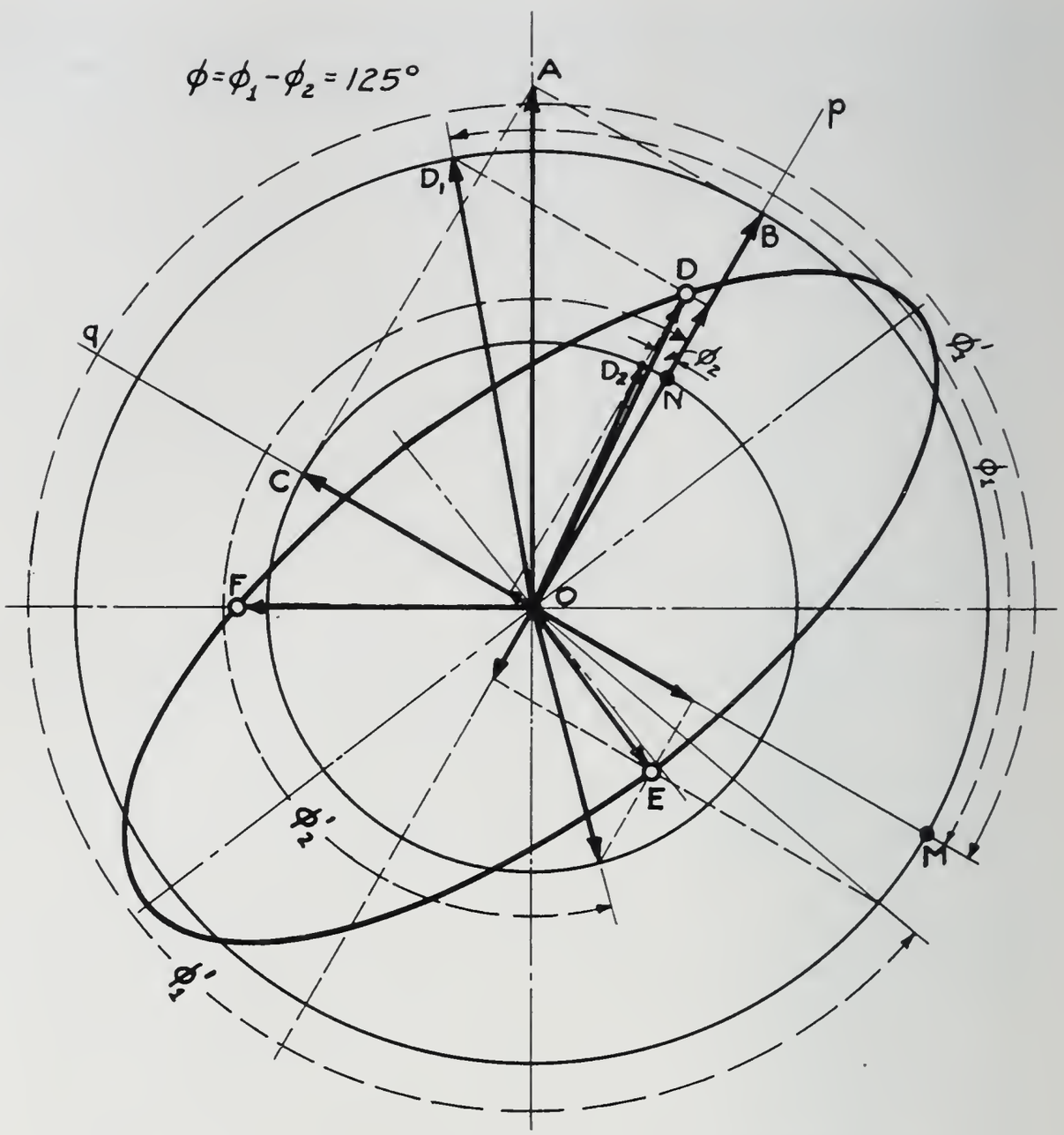

Fig. 10. Design of Hodograph for an Elliptical Polarized Ray.

this is actually the case. To design the hodograph of the elliptically polarized ray, resolve again the ray OA into the two vectors OB and OC. A complete wave-length λ of the ray OB is represented in Fig. 10, by the outer circle which passes through M. The projection of points on the circle to the axis p will give the magnitude of the light vector at each instant. In a similar manner the ray OC is represented by the inner circle which passes through N. The retardation R in units of wave-lengths must be transformed into a retardation in degrees, ϕ. This is accomplished by means of the equation,

$$\frac{R}{\lambda} = \frac{\phi}{360} = \frac{\phi_1 - \phi_2}{360}.$$

The construction of any point of the ellipse, as D, is made as follows. Lay out points D_1 and D_2 determined by angles ϕ_1 and ϕ_2. The vector OD is the resultant of the component of the vector OD_1 in the axis p and the component of the vector OD_2 in the axis q. Other points of the hodograph, such as E, are determined in a similar manner, ϕ being equal in this case to $\phi_1' - \phi_2'$.

From the above equation it is obvious that when rays of different wave-lengths are transmitted, the angular retardation must vary, as R is approximately constant. (In reality the indexes n_1 and n_2 depend upon the wave-length and the temperature. The temperature effect can, as a rule, be neglected in photo-elastic work; consequently the relative retardation R depends on the wave-length. However, this variation of R with the wave-length is generally small in comparison with the range of visible rays.) Therefore, for every wave-length of the white light a different hodograph must be drawn. Only the component vibrations in the horizontal plane will be selected by the analyzer from these hodographs. The color which is produced results from the sum of these component vibrations.

Application of Optical Equipment to Obtain the Principal Stress Direction and the Difference p–q. If a material having the same properties in each direction, known as isotropic material, is placed in a beam of polarized light, no appreciable change will take place in the light. If, however, æolotropic material, material having different properties in different directions, such as mica plate, is placed in this beam, important changes occur as explained above. Certain materials,

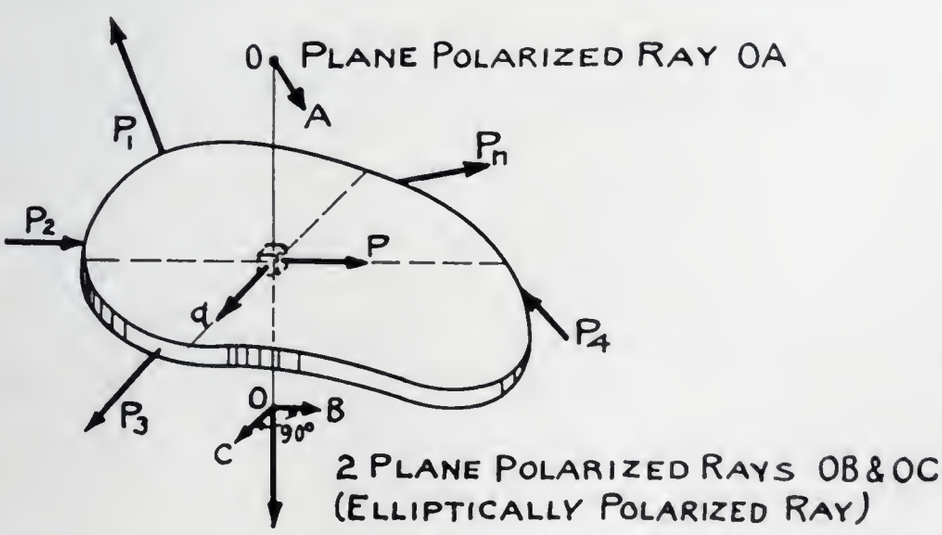

Fig. 11. Effect of a Loaded Transparent Model upon a Plane Polarized Ray, OA.

as glass, bakelite, and celluloid are isotropic when in an unstressed condition, but are æolotropic when stresses and strains are present. On this phenomenon the study of the direction and the magnitude of the principal stresses is based. In Fig. 11, let OA represent the light vector of the plane polarized ray. This vector is resolved into two vectors OB and OC in the directions of the principal stresses p and q. This is similar to the phenomenon described for the mica plate; consequently the qualitative analysis for mica applies here.

To obtain the *directions* of the principal stresses, plane polarized light is employed; that is, the integral part of the optical equipment is the two crossed Nicol prisms. If for a certain point the plane of polarization coincides with the principal stress direction, the ray of plane polarized light remains plane polarized, as before, and no light passes through the analyzer, as explained above. The spot, therefore, appears dark on the screen. By connecting the consecutive points for which a dark spot is obtained, a curve will result. This curve is known as an isoclinic line, since all points on the line indicate principal stress directions which have equal inclinations to a reference axis. By changing the angular relation between the plane of polarization and the reference axis, as many isoclinic lines as desired may be obtained. Since now the principal stress direction is known at every point of the model a new set of curves can be drawn, such that the tangent at every point of each line will indicate the direction of principal stress. These lines are called lines of principal-stress direction. As an element always has two principal-stress directions at right angles to each other, as shown in Fig. 2, a second set of principal-stress direction lines intersecting the first set at right angles can be drawn.

To obtain the difference $p-q$ between the principal stresses p and q, either plane or circular polarized light can be employed. The measurement of $p-q$ is based upon the fact that the two rays OB and OC (Fig. 11) during their travel through the stressed specimen suffer a slight change in wave-length. It will be remembered that such a change was discussed when investigating the effects of mica on polarized light. However, in the case of the celluloid the difference R_3 in time phase is given by Wertheim's law, $R_3 = ct\ (p-q)$, in which c is an optical constant depending largely on the material, and t is the thickness of the model. Due to this phase difference, R_3, a colored spot on the screen is obtained in exactly the same manner as explained

for the mica plate. Lines may be drawn to connect spots of equal color which are called isochromatic lines. Since a certain color represents a certain difference, $p-q$, and since $p-q$ is equal to twice the maximum shear stress the isochromatic lines are lines of equal shear. If the difference $p-q$ is zero, the retardation R_3 is zero (Wertheim's law); therefore, the component rays OB and OC (Fig. 10) are in time phase, the plane polarized ray OA remains unchanged, and a black spot is obtained.

It will be seen that the black spots are due to two causes (1) coincidence of the plane of polarization with the principal stress direction, and (2) zero retardation. As confusion is likely to occur in the interpretation of results and as isoclinic lines are not necessary in determining magnitudes of stresses, the isoclinic lines should be excluded. This is accomplished by using circularly polarized light obtained through the use of a mica plate located after the polarizer. A second mica plate is placed before the analyzer to cancel the effect of the first with respect to the retardation produced by the first plate.

To make accurate readings of the difference $p-q$, a compensator as developed by Babinet or Bravais can be employed. Coker suggested as a compensator a compensation strip of the same material as the model. This strip is placed after the model and before the analyzer, its colored picture on the screen being superimposed upon that of the model. The stress of the compensation strip is then varied until it compensates the effect of the stress of the model, resulting in a black spot on the screen. Thus the stress, p, of the compensation member is equal to $p-q$ of the model.

If the difference between the principal stresses $p-q$ and their directions are known throughout the model, p and q can be separated analytically. They can also be obtained separately by employing a

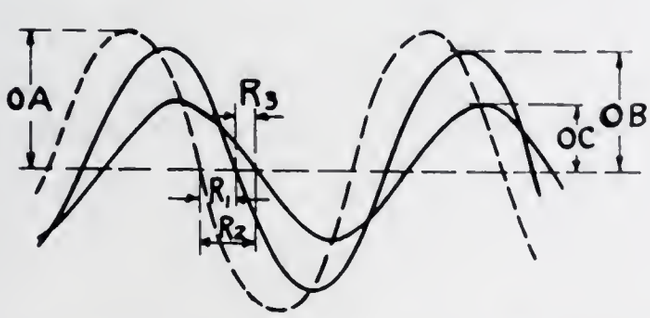

Fig. 12. Wave Retardation of Component Vibrations OB and OC with Respect to Incident Ray OA.

light interferometer of the Michelson, Mach, or Jamin design. This instrument allows the retardation R_1 and R_2 (Fig. 12) to be measured. These values are connected with the stresses p and q by the equations $R_1 = atp + btq$, and $R_2 = btp + atq$, in which a and b are optical constants. These constants are related to the constant c (Wertheim's law) by the form $a - b = c$.

The stresses p and q can also be obtained by accurate deflection measurements. The measurement of the change in thickness $\triangle t$ of a flat model subjected to external loads gives the sum $p + q$. This information is of special value, since by combining this result with the knowledge of the difference $p-q$, obtained optically with the arrangement consisting of two Nicol prisms and usually two mica plates, p and q can be separated. The value $\triangle t$ can be measured either optically or by a mechanical apparatus such as designed by Coker. This mechanical apparatus, known as a lateral extensometer, utilizes two needles and a combined mechanical and optical multiplying system.

All of these methods of obtaining p and q separately are being studied by us, but none of them has yet been finally adopted.

PART 2

The application of the optical method is based upon the fact that the stress distribution in two-dimensional problems in most cases does not depend on the properties of the material. The results as obtained with the transparent models can, therefore, be directly applied to steel and other structures, provided the materials involved are homogeneous and follow Hooke's law.

In many instances it is difficult to make the test set-up with definite conditions and still completely simulate the actual condition of loading of the machine element in service. Complications of this nature, however, may occur with any kind of experiments.

In cases where the machine element tested is of standard design, it is sufficient to give directly the stresses experimentally obtained for a certain load per inch of thickness. In other cases it has been found useful to introduce the so-called factor of stress concentration, k. This factor is obtained by dividing the actual stress p_{max} experimentally established by the stress p_F calculated on the basis of certain assumptions. If, for instance, a tension is applied to a simple test

specimen as shown in Fig. 13, the stress $p_F = \frac{P}{A}$ increases proportionately with the load (line a, Fig. 15) whether the material con-

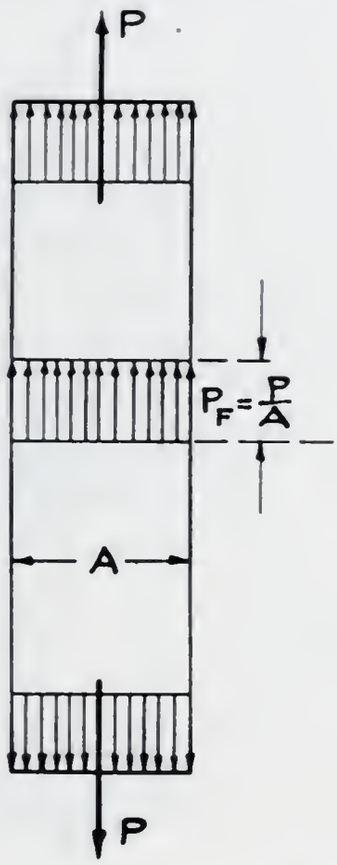

Fig. 13. Tensile Test Specimen, Uniformly Loaded.

sists of celluloid or steel, provided the proportional limit of either material is not exceeded. In the notched specimen in Fig. 14, having the same dimensions as the simple test-piece an increase in the average stress $p_F = \frac{P}{N}$ must be expected (line b, Fig. 15), due to the decrease in the cross-sectional area. The experiment shows, however, that the actual maximum stress p_{max} (line c, Fig. 15) in point A (Fig. 14) is much greater than the average stress p_F. The value k, according to the definition given above, is the ratio between the values of stress, given by line c, with respect to those of line a or b,

$$k = \left[\frac{p_{max}}{p_F}\right]_{\text{transparent model}} = \left[\frac{p^1_{max}}{p^1_F}\right]_{\text{steel}}$$

From this it will be seen that the designer, when he is informed regarding the numerical value of the factor k as well as the method used to figure p_F, is enabled to calculate the correct stress $p^1_{max} = kp^1_F$ at

the point A of the steel structure. The introduction of the factor k complicates to a certain extent the application of the test results, but it allows, on the other hand, a comparison between the true value of maximum stress and the value computed by approximate analytical

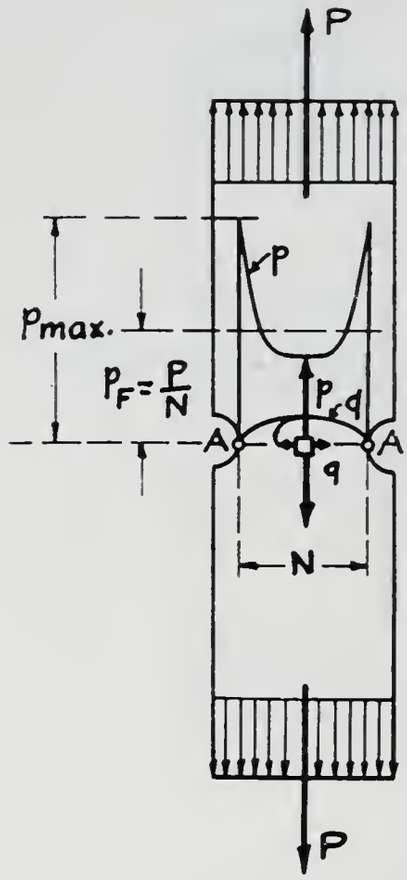

Fig. 14. Notched Test Specimen, Showing Distribution of p and q Stresses.

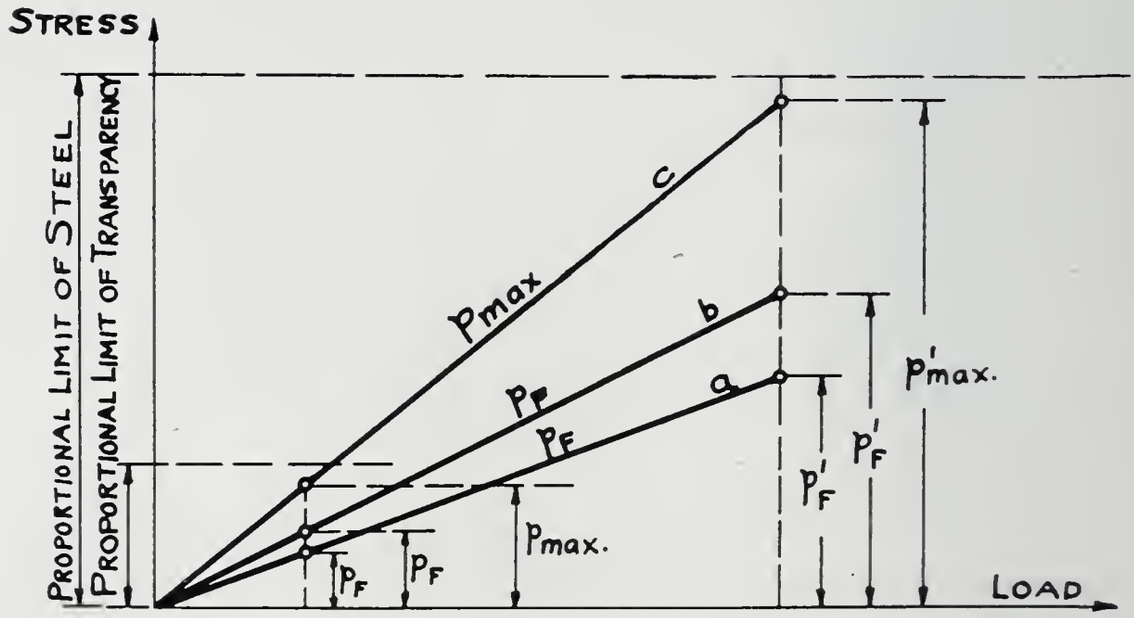

Fig. 15. Load-Stress Diagram for Tensile and Notched-Bar Test Specimens of Fig. 13 and 14.

methods. There is not at the present, to the writer's knowledge, any analytical method of accurately calculating the stress p_{max} at the point A of notching or of obtaining the magnitude of the crosswise principal stress q (Fig. 14), except by experimental methods.

Below is a discussion of a few typical examples in which the optical method has been applied. An illustration of the more general type of research and where the method gives extensive quantitative information, is the study of the effect of fillets in flat machine parts with variations in cross-sections. It was found that the maximum stress (p_{max}) is always set up near the point where the fillet starts (point M, Fig. 16-18). Its magnitude, in case of tensile specimens

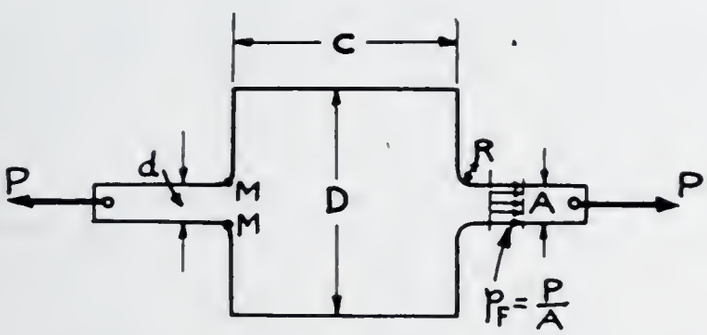

Fig. 16. Model to Investigate Effect of Fillet in Tension.

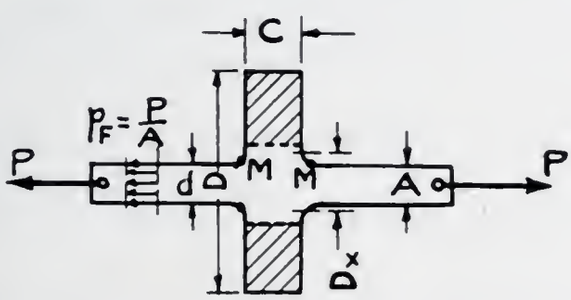

Fig. 17. Model to Investigate Effect of Fillet in Tension.

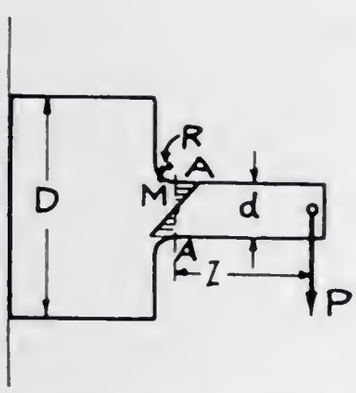

Fig. 18. Model to Investigate Effect of Fillet in Bending.

(Fig. 16 and 17) is given by the equation $p_{max} = kp_F$ in which p_F is the average stress $\left(\frac{P}{A}\right)$ set up at the ends (Fig. 16 and 17), and k the factor of stress concentration.

In studying the magnitude of the factor of stress concentration, models of the type shown in Fig. 16 were used and values given in Table I below were obtained.

TABLE I. FACTORS OF STRESS CONCENTRATION k OF FILLETS*

$\frac{D}{d}$	$\frac{R}{d}$					
	1/16	1/8	3/16	1/4	3/8	1/2
3	3.1	2.66	2.28	2.0	1.76	1.6
2½	3.1	2.58	2.18	1.90	1.65	1.51
2	2.66	2.29	1.97	1.74	1.52	1.41
1¾	2.42	2.14	1.87	1.66	1.45	1.36
1½	2.2	2.0	1.77	1.58	1.39	1.31
1⅜	2.1	1.92	1.72	1.54	1.35	1.28
1¼	1.96	1.84	1.66	1.50	1.32	1.26
1⅛	1.86	.....	1.60	.....	.....	.....

It will be noted that in this table, k depends on the ratio of the radius (R) to the width (d) at the ends of the model, and also on the ratio $\frac{D}{d}$, where D denotes the width of the model at the middle. Furthermore, it will be observed that k increases with decrease in the ratio $\frac{R}{d}$ and with increase in the ratio $\frac{D}{d}$. The writer has found that in cases where fillets are comparatively near each other (Fig. 17) as in the case of threads, or shrink fit of gears, the effect of the fillets is decreased. The dimension D may become in such cases, of secondary importance as compared with the width c. From tests with a model of the type shown in Fig. 17, it was found that a considerable amount of the material of the crosswise extension does not participate appreciably in transmitting the tensile load P; in other words, that this material (indicated by the dotted area in Fig. 17) can be considered as dead. Furthermore, it was found that the value k of the table held

*Stress concentration produced by holes and fillets, by S. Timoshenko and W. Dietz. Trans. A.S.M.E., 1926, v. 47, p. 199.

approximately, provided a reduced dimension D_x instead of D (and, therefore, the ratio $\frac{D_x}{d}$ instead of $\frac{D}{d}$) was taken, where

$$D_x = d + 0.3\ c.$$

It has also been found that the numerical values of the factor k as obtained from the tensile tests can be used in bending (See Fig. 18), so that the maximum stress is equal to $p_{max} = kp_F$, in which p_F is the bending stress obtained by dividing the bending moment Pl by the section modulus S of the section AA in Fig. 18.

Stresses in Gear Teeth. The study of stresses at the roots of gear teeth is a case where the optical method can be applied very successfully. By testing a model as in Fig. 19 the values given in Table II

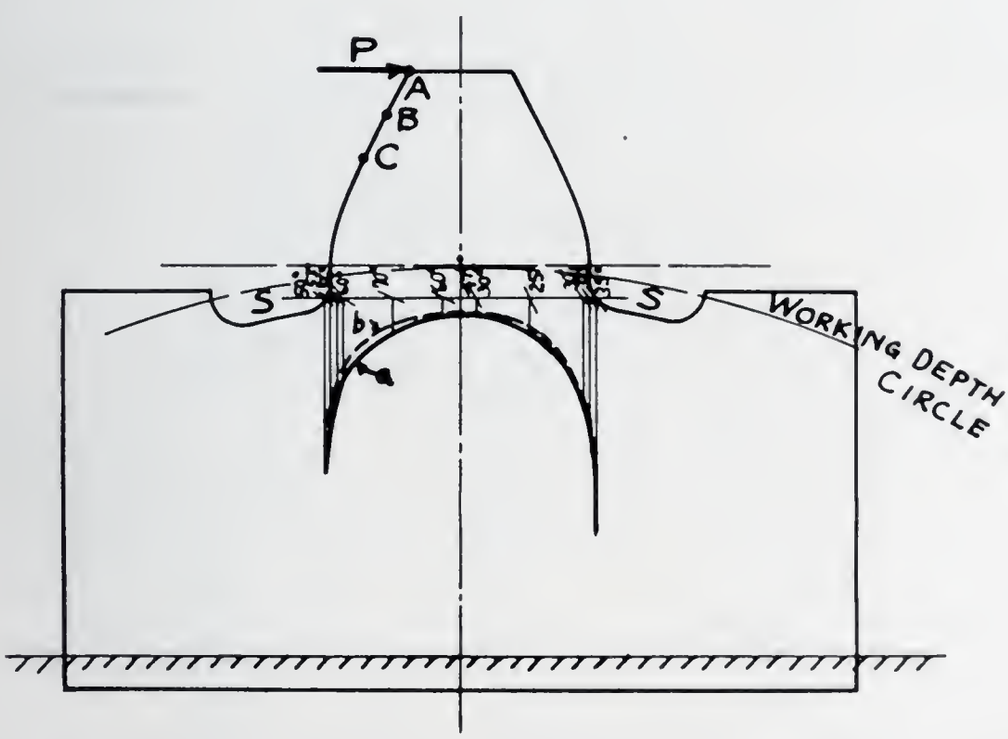

Fig. 19. Gear-Tooth Model, Stress Distribution in Root Section SS.

were obtained. (Since a gear tooth can not be classed as a beam such as tested (Fig. 18) due to its short length l the magnitude of the stress-concentration factor at the fillet as given in Table I is only approximate. Likewise, in all similar cases where the specimen under consideration differs considerably in form from the models already tested, represented in Fig. 16-18, it will usually be best to make specific tests.)

TABLE II. STRESS-CONCENTRATION FACTORS OF THE GEAR TOOTH SHOWN IN FIG. 19

Load applied at point	A	B	C
Tension side	1.8	1.9	2.4
Compression side	2.4	2.4	2.9

In calculating factor k of this table, the computed stress p_F was obtained by applying the simple beam formula for a section tangent to the working depth circle. This test showed that the stresses at the compression side differ considerably from those at the tension side and, furthermore, that these stresses do not decrease in proportion to the decrease in the bending arm l but to a lesser extent.

Direct stress readings were made in various sections of the gear tooth, using the compensation method. For instance, in Fig. 19, curve a gives the distribution of the maximum shearing stress in a section SS through the fillet. This information, together with the knowledge of the direction of the principal stresses, permits a calculation of the

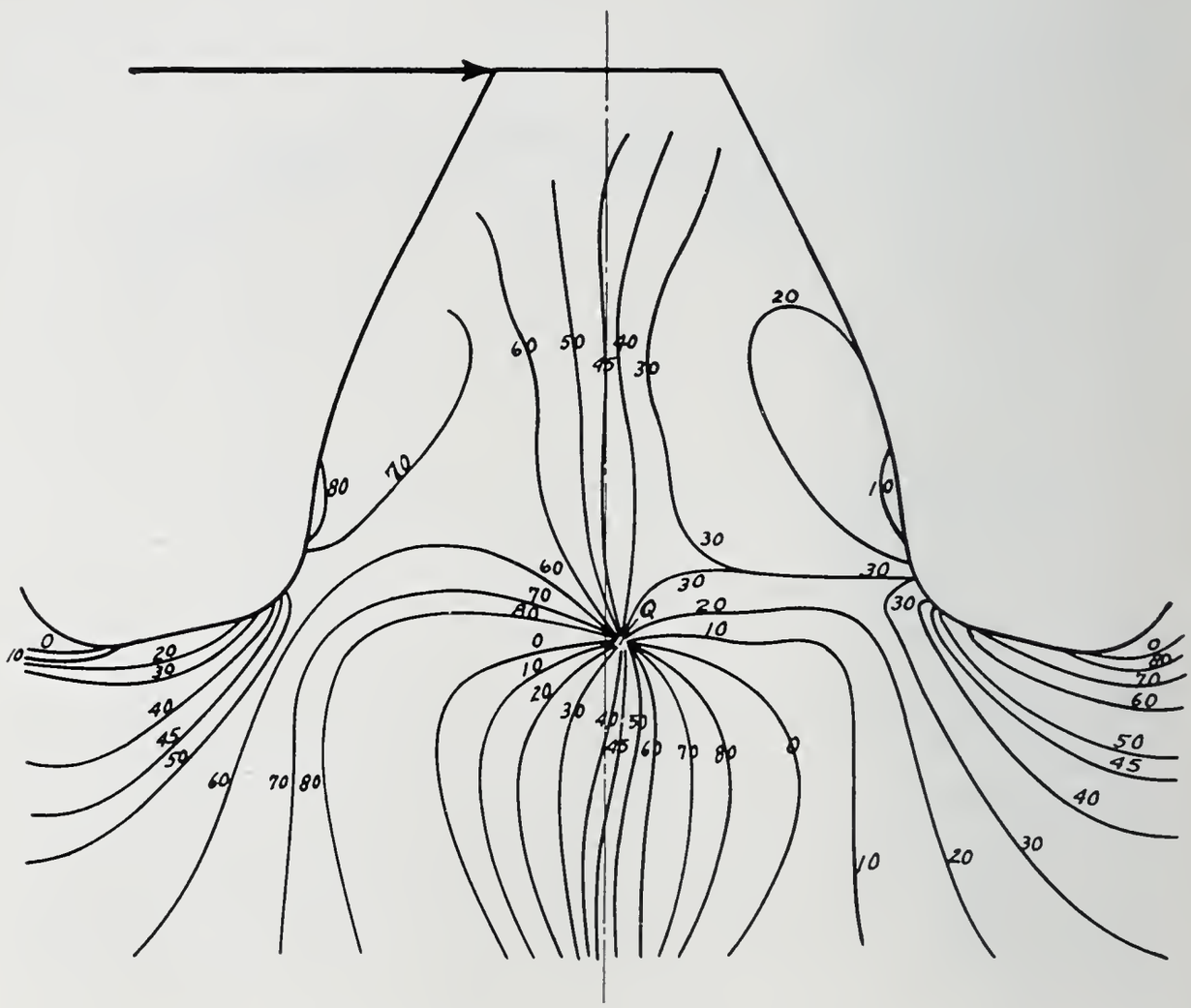

Fig. 20. Same as Fig. 19, Isoclinic Lines.

shearing stresses on elements oriented perpendicularly and parallel to the section SS. In this manner the curve b (Fig. 19) was drawn. By a graphical integration of the curve b, the load transmitted in shear is obtained. In this case this shear load must be equal to the externally applied load. Check tests of this nature are carried out in all the important problems. Furthermore, similar tests are made to establish in complicated cases the manner in which different sections participate in transmitting external loads.

Fig. 20 represents the isoclinic lines of the same gear tooth and Fig. 21 the lines of principal stress. The point Q has no particular

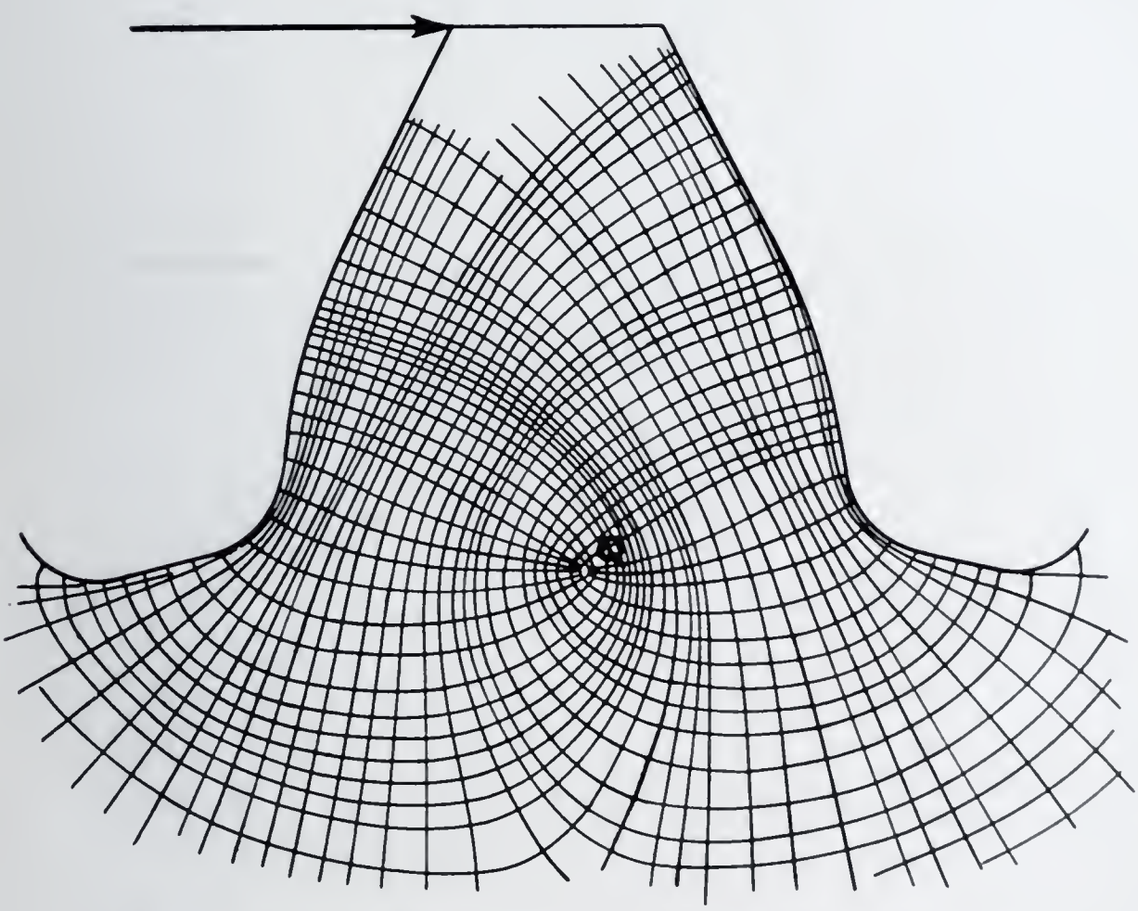

Fig. 21. Same as Fig. 19, Principal Stress Direction Lines.

meaning except that it is a point where both principal stresses are of the same sign and magnitude.

Rail Stresses. The investigation of stress in the fillets connecting the web with the head of the rail is an example of where the numerical values as obtained from optical tests hold strictly only for the two-dimensional case; but where some conclusions can be drawn re-

garding the actual three-dimensional case. (Fig. 22-24.) In railway track curves, the stresses may become serious due to the introduction

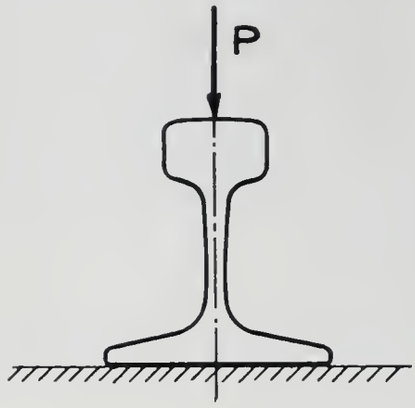

Fig. 22. Centrally Loaded Rail.

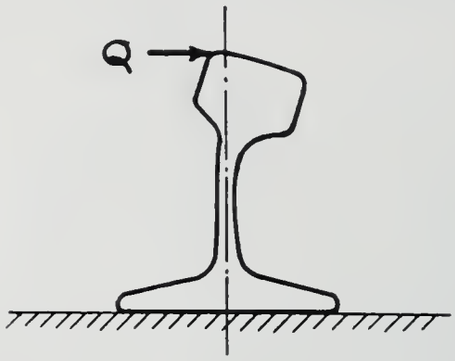

Fig. 23. Laterally Loaded Rail.

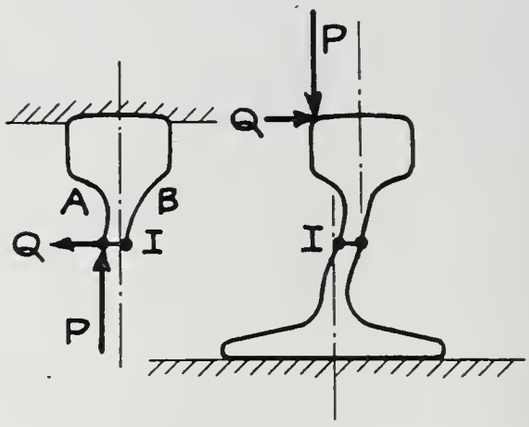

Fig. 24. Combination of Lateral and Eccentric Loads on Rail.

of a lateral load, Q. Due to such a load alone the rail would bend as shown in Fig. 23. Such bending produces a shift of the vertical load P from the center-line to the outer side of the head, and the loading and final deflection will be as indicated in Fig. 24.

This condition was simulated in a photo-elastic test. By mere inspection of the loaded celluloid model the point of inflection I could be located. On the basis of this information, the stress-concentration

factor could be established for the two-dimensional model ($k = 1.3$), which value may hold approximately also in the three-dimensional case.

A combination of forces, such as indicated in Fig. 23, will produce a maximum stress in the fillet A, and if fractures should occur they will start in the fillet A, provided the material of the outer fibers has the same strength in tension as in compression.

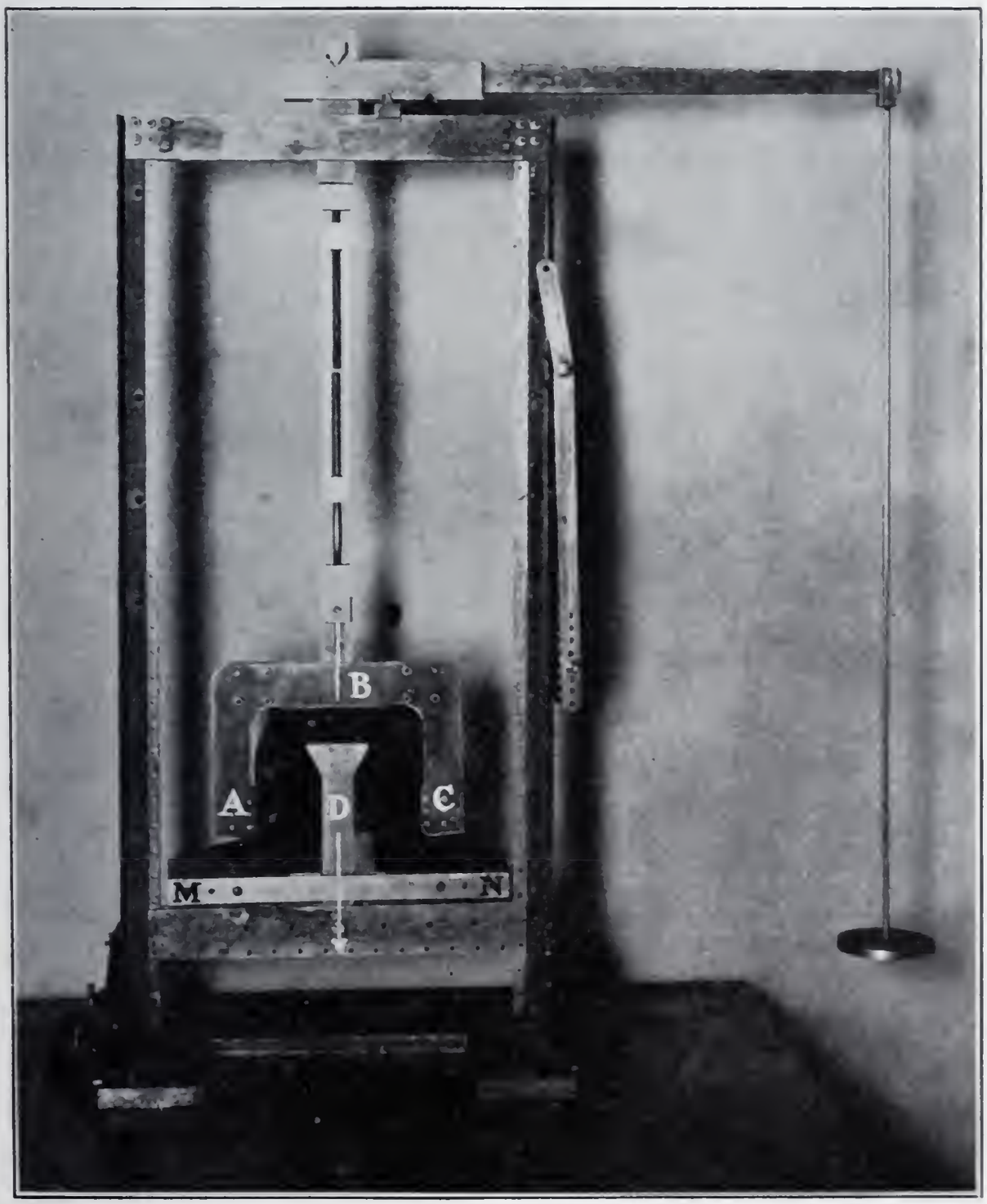

Fig. 25. Loading Arrangement for Tests on Suspension Insulator.

Suspension Insulator. This was one of the applications of the photo-elastic method, where only qualitative information was expected; that is, information regarding places in which the most unfavorable stress conditions exist.

In Fig. 25 the test arrangement is shown in which the force P is applied by a lever system, and the two steel parts ABC replace the cap of the insulator. The applied load is transmitted to the model at points A and C, at which points the celluloid model is riveted to the part ABC. A force P of opposite direction is transmitted to the model by the steel stud D. The steel bar MN, connecting the ends of the model, simulates the stiffening effect of the lower part of the insulator, and prevents the spreading of the ends of the celluloid model under the action of the force P. At B the model is free to move between the two parts of the frame ABC.

Fig. 26 shows the outline of a section of the porcelain cap tested. Within the fillet and the top part of the specimen, tensile stresses of

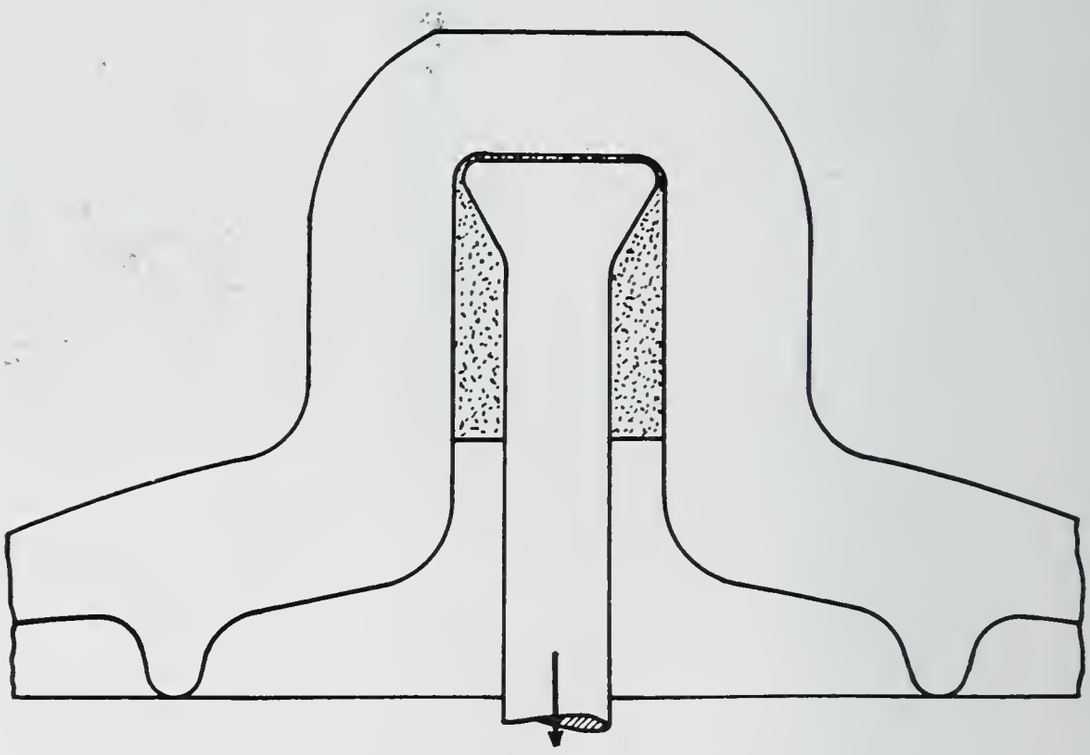

Fig. 26. Porcelain Cap of Insulator Tested.

considerable magnitude were obtained. The contour, which on the basis of these tests was thought to be superior mechanically, is shown in Fig. 27. However, the design with respect to mechanical strength to provide for external loading, may not be the exclusive consideration, for insulator problems are rather intricate and involve many other factors.

Theories of Strength of Materials. To use correctly the information obtained from optical tests it is necessary to apply the theories of strength of materials. The best materials for engineering struc-

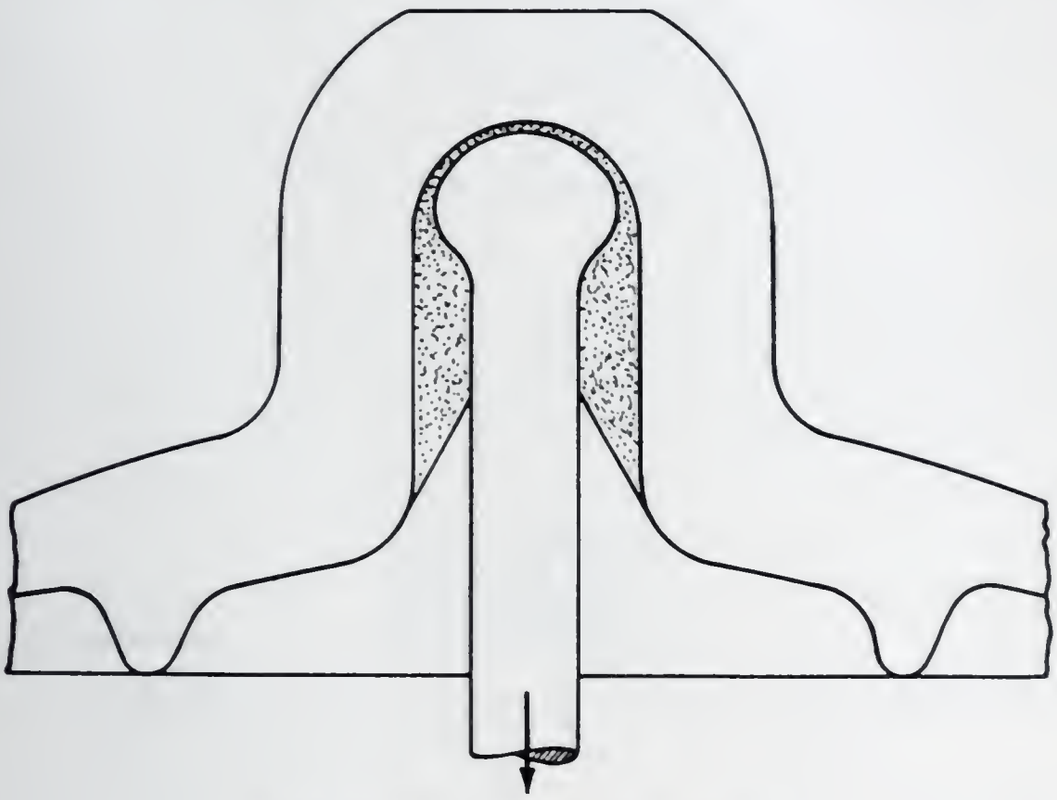

Fig. 27. Porcelain Cap Suggested.

tures are those with high cohesion resistance and also high slippage resistance.

Brittle materials such as porcelain, concrete, cast-iron, and hardened steel have a small cohesion resistance as compared with their slippage resistance. As soon as the cohesion resistance at one point in a structure of such materials is overcome, a crack occurs which spreads and causes fracture before any appreciable deformation has taken place. It is, therefore, necessary for the designer to know accurately the magnitude and location of the maximum tensile and compressive stresses.

It is well known, for instance, that concrete is weaker in tension than in compression and that concrete structures can be strengthened considerably by placing steel reinforcing rods and bars in such a manner as to take up the tensile forces. To do this efficiently, the direction and magnitude of the tensile stresses should be known at all points of the structure. This is precisely the information gained from

optical tests. Fig. 28 shows the lines of principal tensile stress and shows theoretically how the concrete should be reinforced. To shape

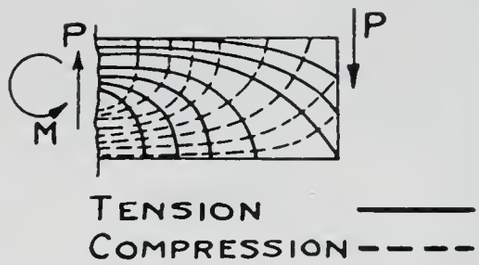

Fig. 28. Beam, Showing Lines of Principal Stress Direction.

and locate reinforcing rods exactly as optically determined, however, would be too expensive. Therefore, an approximation as to shape and location is usually made. (Fig. 29.)

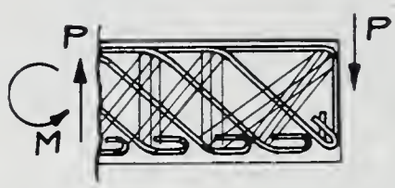

Fig. 29. Same Beam as in Fig. 28, Reinforced by Rods.

Fig. 28 and 29 are from "Die kraftfelder in festen elastischen körpern und ihre praktischen anwendungen," by T. Wyss. 1926. Julius Springer, Berlin.

In case of ductile materials such as mild steel, the cohesion resistance is great as compared with the slippage resistance. The material starts to slip as soon as the yield point in shear is reached. A knowledge of the distribution of shear stress is, therefore, required—knowledge which can be obtained from optical tests. If the load is being increased further—for instance, as in a notched-bar test specimen—the material near the point A (Fig. 14) yields, and a redistribution of the principal stresses p and q takes place. Such a flow of plastic material at points of high stress is, as a rule, not objectionable, provided we deal with static stresses.

In cases where we have ductile material, and a three-dimensional distribution of stress, a careful study of the magnitude of maximum shear stress and the plane of its action must be made. If the stresses in the three directions become nearly equal and of the same sign (tension), the fracture will occur due to overcoming of the cohesive forces rather than of the slippage resistance because the maximum

shear stress is small. Materials which show evidence of ductility in static loading also behave like brittle materials when impact loads are applied. This has been explained by an increase in the slippage resistance with increasing slippage speed. Thus, it is seen, that three-dimensional distribution of stress and impact loads may render ductile materials brittle, producing fractures which are coarse as in cast-iron. It will be seen, therefore, that in such cases the tensile strength, compressive strength, or both combined may become the governing consideration.

In the case of alternating stress, stress concentration becomes serious and must be considered, not only in brittle, but also in ductile materials. Due to stress reversals in spots of high stress concentration a crack may start which gradually spreads and produces failure.

Whenever a decision must be made as to whether faulty materials have been employed or whether fracture is due to faulty design, it is necessary to have a clear picture of stress distribution. In most cases of two-dimensional problems, and to a large extent even in three-dimensional problems, the optical method offers a very useful means of gaining the necessary knowledge regarding the design.

History. In the following are given historical references on the subject of the optical method of stress analysis. This work originated in 1815 with Sir David Brewster, who experimented with glass plates. Glass is not satisfactory for industrial work because of difficulty of shaping. The study received a considerable impetus with the discovery of new kinds of transparent products, such as celluloid, which has been used extensively by Coker since 1910. Coker also designed the instrument which is being used in the Research Laboratory of the Westinghouse Electric & Manufacturing Company.

The laws involved were studied from a mathematical point of view by J. E. Neumann (1841). (The figures in parenthesis indicate the year of the publication of the first article on this subject known to the writer of this paper.) Many others have also contributed in some way to the development of the optical method of stress measurement. Among these are F. Pockels (1889), Carus Wilson (1891), A. Mesnager (1901), Hoenigsberg (1904), L. N. G. Filon (1907), H. Schulz (1916), A. L. Kimball, Jr. (1920), Heymans (1921), W. Birnbaum (1924), and F. Tank-H. Favre (1927).

DISCUSSION

E. R. JOHNSON:* Mr. Baud speaks of ductile material and brittle material. Speaking of the actual steel itself, it is sometimes hard to realize just how the stress distribution will be. For instance, in celluloid, you will always have the same type of material and the stress distribution will always be the same. With two specimens of steel, varying in analysis, yet having the same hardness and physical characteristics, the distribution may not be the same at all. For instance, a certain stress distribution is obtained in celluloid, pyralin, or material of that kind. Would the stresses in that be similar to what you would get in a brittle material or what you would get in a ductile material?

R. V. BAUD: The stress distribution is strictly the same in the celluloid model or in the same element machined of any other material, provided (1) that the celluloid, of which the model is made, as well as the other material, is homogeneous and isotropic (in unloaded condition); (2) that the loading conditions are strictly the same; (3) that the loads externally applied are in equilibrium for each boundary; and (4) that, for the materials involved, the stresses are below the proportional limit at every point. In practice it is almost impossible to obtain these ideal conditions, but certain deviations from the above requirements do not substantially impair the accuracy of the tests.

R. J. FRANK:† Has this experimental work gone into the X-ray or magnetic field to develop these same characteristics with the actual metal?

R. V. BAUD: Some scientific work has been done in an attempt to investigate elastic and plastic deformations of metals by means of X-rays.

J. B. NATHANSON:‡ You have measured the stresses in your samples in terms of color. Plane polarized light is incident upon the test specimen, and, upon entering the sample, is split into two com-

*Central Alloy Steel Corporation, Massillon, Ohio.
†Vice-President in Charge of Sales, Copperweld Steel Co., Glassport, Pa.
‡Assistant Professor of Physics, Carnegie Institute of Technology, Pittsburgh.

ponents which travel through the specimen with different velocities. Upon emerging from the specimen the two components are reunited to give a beam such that the phase difference of the two components is now different from that before passage through the specimen. Could not, therefore, the stresses be measured with greater accuracy by determining by means of a Babinet compensator, for example, the phase difference of the emerging components?

R. V. Baud: The simplest method of determining stresses is that in which the colors of the test-piece are compared with the colors of a loaded comparison strip. This, I suppose, is the method to which Dr. Nathanson refers. However, the matching of brilliant colors, although simple, is, as a rule, not accurate enough for a quantitative study of stresses.

A more accurate method, which we have adopted, consists of the use of a compensation strip in the manner outlined in the paper. An even higher accuracy could be obtained by employing a Babinet compensator as suggested by Dr. Nathanson. However, the use of this device would considerably complicate the test. Since in industrial research we are usually more concerned with quick results, accurate enough for practical purposes, we prefer the use of a loaded celluloid strip as compensator.

The importance of a speedy and simple machining and testing of models is again brought out by the fact that we use models machined from celluloid, although this material exhibits some undesirable time effects. Glass is preferable in this respect, but is difficult to cut to the desired shape.

W. M. Austin:* I would like to ask Mr. Baud what the stress-concentration factor is in the standard test specimens that are used for concrete, assuming of course that the material tested follows Hooke's law.

R. V. Baud: Professor Coker of the University College of London, has investigated the stresses in the English and French standard test specimens by means of polarized light. If I remember cor-

*Engineer. Westinghouse Electric and Manufacturing Co., East Pittsburgh, Pa.

rectly, he mentions a stress-concentraction factor of 2.0.* He also states that the results obtained with the British standard are generally applicable to American and Canadian standards.

C. P. FULLER:† I wonder how many of us know why there is a concentration of stress at fillets and holes.

R. V. BAUD: A few years ago our conception of stress concentration was confined merely to a knowledge of its presence. To-day we are able to measure it optically. Soon we may be able to solve simple problems analytically. In fact, attempts have been made in the latter direction and a few solutions obtained.

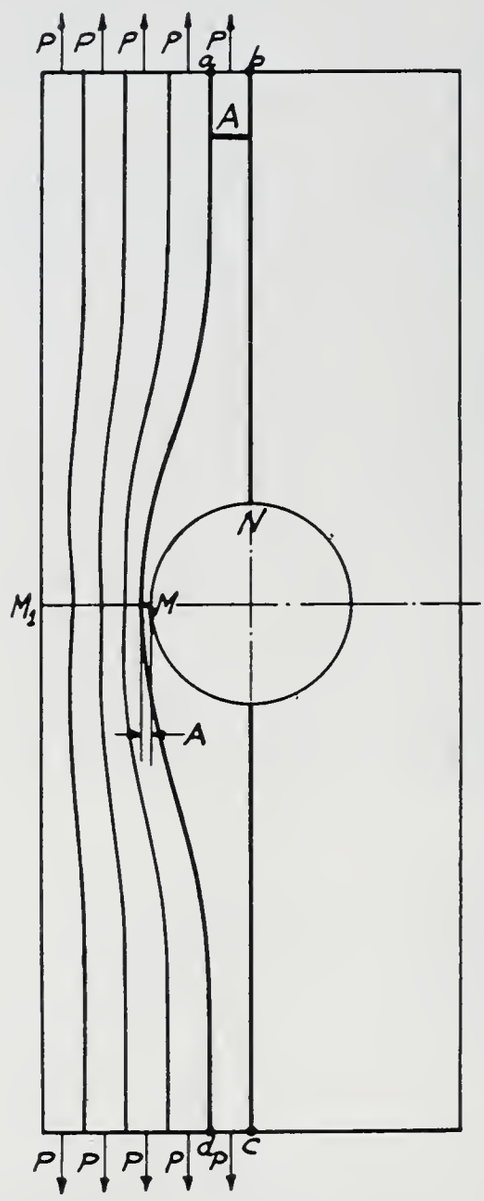

Fig. 30. Lines of Principal Stress Direction in a Specimen with Hole.

*This was checked after the meeting and it was found that the correct values are, British form, $k = 1.74$; French form, $k = 2.13$. (Journal of the Royal Society of Arts, 1927, v. 75, p. 1065-1069.)

†Engineer, Koppers Co., Pittsburgh.

An explanation of stress concentration although incomplete, can be given on the basis of the principal stress direction lines. In Fig. 30 these lines are shown for the case of a tensile test-piece with a hole. This test-piece may be thought of as divided into *n* small elements, such as abcd. The load per element, P, remains constant but the cross-section, A, varies. At certain points such as M, in the vicinity of holes, fillets, or notches, the cross-section of the element abcd decreases considerably, thereby causing stress concentration in the material at the point M. (See also Fig 21.) Such an explanation does not hold for point N, in Fig. 30; in fact, due to the deformation of the hole, which becomes elliptical under the applied load, the material at N is in compression. We see, therefore, that the above explanation is incomplete, as transverse stresses are neglected. Further explanation would be beyond the scope of this discussion, but it is obvious that a mapping of principal stress direction lines is a substantial aid in explaining stress concentration.

J. N. CHESTER:* If we have a tensile test-piece with a hole, the diameter of which is almost equal to the width of the piece, would there be much stress concentration? It seems that due to the absence of sufficient material around the hole to constrain elongation, the stress in a point such as M would not greatly exceed the average stress in the section MM_1.

R. V. BAUD: This, I think, is true. However, it may also be explained in the following manner. The material between the large hole and the side of the specimen may be considered as a tensile test-piece, one side of which is straight and the other slightly curved. Due to this slight curvature the stress concentration will be small. The factor *k*, representing the ratio between the stress in M and the average calculated stress for the net section MM_1, will be about half of that for the case of a hole in a plate of infinite width, where $k = 3.0$. The explanation given above for a small hole holds here, also, since we can expect in the case of the large hole that the principal stress direction lines are about equally spaced along the net section MM_1.

R. SERGESON:† Will you state again where steel that is ductile in tension may be brittle on impact. I have had occasion to make

*J. N. Chester Engineers, Pittsburgh.
†Metallurgist, Central Alloy Steel Corporation, Massillon, Ohio.

tensile tests on locomotive fire-box plate obtaining acceptable physical properties with a silky fracture, yet on the same material a brittle and crystalline fracture was obtained on impact.

R. V. BAUD: It has been pointed out in the paper that ductile material behaves like brittle material (1) when impact loads are applied, and (2) when at a certain part of the test-piece, there is a three-dimensional stress distribution of the characteristics outlined in the paper. A combination of both causes makes the phenomenon more pronounced.

R. SERGESON: Did I understand you that the brittle material is of equal strength in all directions?

R. V. BAUD: If a material is homogeneous and isotropic, as is generally assumed for simplification, then, by definition, its strength is the same in all directions. However, it is hard to tell how far the assumption holds in different materials. It is a well known fact that in some manufacturing processes, notably rolling and drawing of metal, a ductile material is given directional properties. Such a material, when stretched, is usually stronger along the axis of elongation and weaker in a transverse direction than it was before undergoing the deformation. However, it is difficult to make statements with regard to directional properties of brittle materials.

E. R. JOHNSON: One other question I would like to ask, is in regard to the cause of pitting on gear teeth. A previous article,* of which you were joint author, explained pitting on the basis of a maximum stress concentration beneath the surface. Constant fatigue would apparently cause the failure beneath the surface of the tooth to progress to the surface and thus form a pit. Could you explain the stress distribution and type of stresses thus developed when gear teeth mesh together?

R. V. BAUD: In the case of a load uniformly distributed over a small portion of a large plate, the locus of all points of maximum shear stress is a semicircle, which has the contact line AB as diameter. (See Fig. 31.)

*Strength of gear teeth, by S. Timoshenko and R. V. Baud. Mechanical Engineering, 1926, v. 48, p. 1105-1109.

If the load is not applied uniformly, then the stress distribution becomes complicated. In the article mentioned by Mr. E. R. Johnson

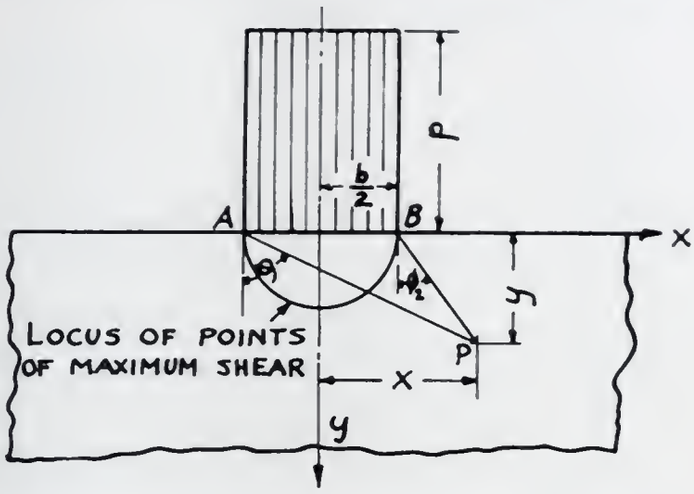

Fig. 31. Contact Pressures and Stresses, Uniform Loading.

the load distribution was assumed parabolic over the contact area of the gear teeth. The magnitude of the maximum shear stress was in this paper given for the center-line. It was pointed out that the curve

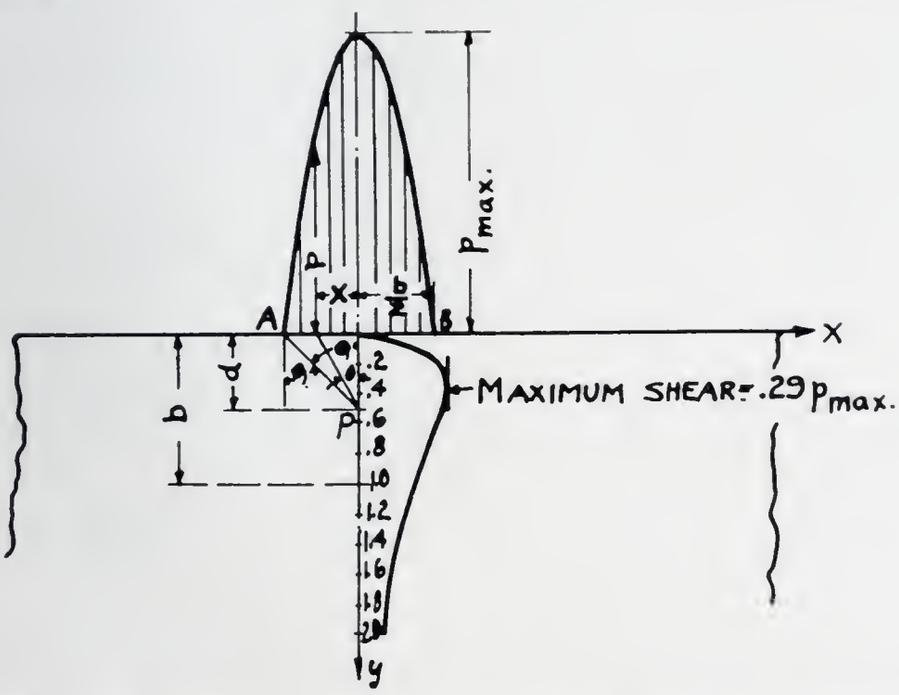

Fig. 32. Contact Pressures and Stresses, Parabolic Loading.

representing maximum shear stress for the center-line also shows a maximum below the surface. (Fig. 32.)

* * *

The equations necessary to prove the above statements were investigated after the meeting and are given here to complete the discussion with regard to the question raised by Mr. E. R. Johnson.

In Fig. 31-32, the normal stresses X_x and Y_y, and the shear stress $X_y = Y_x$ acting on an element oriented parallel to the axis x y, are given by the following equations:*

$$X_x = -\frac{2}{\pi}\int_{\theta_2}^{\theta_1} p \sin^2 \theta \, d\theta \qquad (1)$$

$$Y_y = -\frac{2}{\pi}\int_{\theta_2}^{\theta_1} p \cos^2 \theta \, d\theta \qquad (2)$$

$$X_y = \frac{2}{\pi}\int_{\theta_2}^{\theta_1} p \sin \theta \cos \theta \, d\theta \qquad (3)$$

It is understood that the angles θ_1 and θ_2 are positive when measured in a counter-clockwise direction from the vertical. (Fig. 31.) The equations 4-7, below, apply to points where θ_1 and θ_2 are both positive. If points are investigated where either θ_1 and θ_2, or both, are negative, the negative values of these angles must be substituted in these equations.

Equations 1-3 may now be applied to determine the stresses produced by uniform and parabolic loads.

Uniformly Distributed Load. Equations 1-3 may be easily integrated as p is constant. By integration we obtain:

$$X_x = -\frac{p}{2\pi}\left[2\,(\theta_1 - \theta_2) - \sin 2\theta_1 + \sin 2\theta_2\right] \qquad (4)$$

$$Y_y = -\frac{p}{2\pi}\left[2\,(\theta_1 - \theta_2) + \sin 2\theta_1 - \sin 2\theta_2\right] \qquad (5)$$

$$S = \frac{p}{2\pi}\left[\cos 2\theta_2 - \cos 2\theta_1\right] \qquad (6)$$

The maximum-shear stress will be obtained from the formula

$$S_{max} = \sqrt{\frac{(X_x - Y_y)^2}{4} + S^2} = \frac{p}{\pi}\sin(\theta_1 - \theta_2) \qquad (7)$$

*These three equations are given by S. Timoshenko in his Russian treatise on elasticity.

The same results can be obtained by using the stress function for this case.*

From equation (7) it will be seen that the magnitude of the maximum-shear stress is $\frac{p}{\pi}$ and that this maximum-shear stress is acting on elements for which $\theta_1 - \theta_2 = 90$ degrees. Remembering the definition of the signs of these angles, we see that the locus of points of maximum shear is a semicircle.

Some photo-elastic investigation has also been carried out for uniformly distributed load† and the results were found to be in as close an agreement with theory as could be expected.

Load Distributed According to a Parabolic Law. The stresses are determined for the center-line only, so that $\theta_2 = -\theta_1$, X_x and Y_y are the principal stresses and $X_y = O$.

In this case:

$$p = p_{max}\left(1 - 4\frac{d^2}{b^2}\tan^2\theta\right) \tag{8}$$

By substituting p from equation (8) in equations 1 and 2, and integrating, we obtain:

$$X_x = \frac{p_{max}}{\pi}\left[\frac{4}{\tan\theta_1} + \left(1 + \frac{1}{\tan^2\theta_1}\right)\sin 2\theta_1 - 2\left(1 + \frac{3}{\tan^2\theta_1}\right)\theta_1\right] \tag{9}$$

$$Y_y = \frac{p_{max}}{\pi}\left[2\left(\frac{1}{\tan^2\theta_1} - 1\right)\theta^1 - \left(\frac{1}{\tan^2\theta_1} + 1\right)\sin 2\theta_1\right] \tag{10}$$

$$S_{max} = \frac{X_x - Y_y}{2} = \frac{p_{max}}{\pi}\left[\frac{2}{\tan\theta_1} + \left(\frac{1}{\tan^2\theta_1} + 1\right)\sin 2\theta_1 - \frac{4\theta_1}{\tan^2\theta_1}\right] \tag{11}$$

*Die elastischen platten, by A. Nadai. 1925. Julius Springer, Berlin. (See p. 229-231.)

†"Contact pressures and stresses," by E. G. Coker, K. C. Chakko, and M. S. Ahmed. Proceedings of the Institution of Mechanical Engineers, 1921, v. 85, p. 365-467.

The values of S_{max} were plotted and the curve shown in Fig. 32 obtained. The maximum-shear stress occurs at a depth $d = 0.35\ b$, and its magnitude is $0.29\ p_{max}$.

Assuming that both the uniform and parabolic loads are of the same magnitude, then $p_{max} = 1.5\ p_{uniform}$; consequently, in the case of parabolic load distribution, $S_{max} = 1.5 \times 0.29\ p = 0.435\ p$; whereas, in the case of uniform load distribution,

$$S_{max} = \frac{p}{\pi} = 0.318\ p.$$

Considering elements along the center-line, the maximum-shear stress in the case of parabolic load distribution is 37 per cent. greater than that of uniform load distribution, and the element on which the greater shear stress acts is located nearer the surface.

INVESTIGATION OF ELECTRICAL EQUIPMENT USED IN GASSY MINES*

By L. C. Ilsley†

INTRODUCTION

Covering the fiscal year ending June 30, 1929, Congress appropriated $399,470 for the investigation of mine accidents, to be expended under the direction of the Secretary of Commerce in accordance with the authorized work of the United States Bureau of Mines.

The activities that may be properly undertaken are specified in the act as follows:

> "For investigations as to the causes of mine explosions, causes of falls of roof and coal, methods of mining, especially in relation to the safety of miners, the appliances best adapted to prevent accidents, the possible improvement of conditions under which mining operations are carried on, the use of explosives and electricity, the prevention of accidents, and other inquiries and technologic investigations pertinent to the mining industry, including all equipment, supplies, and expenses of travel and subsistence . . ."

The use of electricity is specifically mentioned, and, were it not, the prevention of mine accidents would undoubtedly be sufficiently embracing to cover all the necessary investigations looking toward the safety of electrical equipment.

The work of electrical testing in accordance with schedules receives its authority from an act of Congress (37 Stat., 681) approved February 25, 1913, which contains the following provision in regard to tests or investigations performed by the Bureau of Mines:

> "That for tests or investigations authorized by the Secretary of the Interior under the provisions of this act, other than those performed for the Government of the United States or State Governments within the United States, a reasonable fee covering the necessary expenses shall be charged according to a schedule prepared by the Director of the Bureau of Mines and approved by the Secretary of the Interior, who shall prescribe rules and regulations under which such tests or investigations may be made. All moneys received from such sources shall be paid into the Treasury to the credit of miscellaneous receipts."

The first schedule for motors was Schedule 2, issued October 26, 1911. This was reissued in a revised form as Schedule 2A, November

*Presented April 12, 1928. Received for publication May 8, 1928. (Published by permission of the Director of the U. S. Bureau of Mines.)

†Electrical Engineer, Pittsburgh Experiment Station, U. S. Bureau of Mines.

2, 1915, and was still further revised and issued as Schedule 2B under date of August 16, 1921.

Under these schedules the following equipment has been approved:

Twelve short-wall mining machines.
One long-wall mining machine.
Two shearing type mining machines.
Two arc-wall type mining machines.
One combination shearing and cutting machine.
Five loading machines.
Six conveyor type loaders.
Three air-compressors.
Seven pumps.
Three drills.
One drilling machine.
Four rock-dusting outfits.
One room hoist.
One concrete-mixing outfit.

The foregoing list of equipment already approved under the Bureau schedules indicates the extent to which permissible equipment is entering into the field of mechanization of coal-mines.

The active zone of this intensified mining is the face area where the coal is being mined and where gas is being liberated and kept in safe dilution only by carefully planned schemes of ventilation. In many mines any interruption to this ventilation creates a hazardous condition due to the possibility of gas or coal-dust explosions. The number of pieces of electrical equipment used on a single outfit and the number of outfits used result in complication. Some electrical appliances have as many as 10 compartments, each capable of igniting gas if not specially designed. Again, the number of units of electrical equipment in a given area is in some cases five to ten times that of yesterday. The wiring necessary to bring power to these units and to facilitate their control is a real problem when approached from a safety standpoint. To date, no satisfactory solution has been found for safely handling stationary wiring or the trailing cables used in such quantities to-day. The dust hazard has been greatly increased in connection with loading and conveying equipment.

In the general plan of intensified mechanization of coal-mines now going on, there are many new electrical applications. These new applications often involve new and untried ideas in design, operation, and maintenance of equipment. From the safety standpoint, a gassy mine is not a proper place to try out questionable experiments. From the operating standpoint, where there are no experiments there is no progress. Perhaps this meeting will help in finding a neutral ground where experimentation can go on and safety be not unduly overlooked.

Let us turn from these introductory remarks and consider some of the detailed phases of design.

TOTAL INCLOSURE OR FLANGE PROTECTION

In designs brought out in recent years the principle of totally inclosing the motor or other part and depending on closely fitting joints has been widely adopted.

In the totally inclosed motor or other accessory the machined surfaces constituting the joints through which flames must escape are referred to as "flanges." According to Bureau of Mines schedules now in effect, these flanges must be metal to metal and form a path not less than one inch long on the shortest line from the inside of the casing to the outside. Gaskets should not be incorporated in the design of flanged joints. They are too easily damaged and only add unnecessary complications to the machine.

Flanges may be classified as plane, cylindrical, step, and irregular, which are described as follows:

Plane Flanges. A plane flange consists simply of surfaces in one plane which have been finished by a planer, shaper, or other machine. In general, where bolt spacing exceeds six inches, a plane flange joint that will prevent the passage of flame is not easily obtained because the force of the explosion tends to open up the joint between the bolts. Some manufacturers depend upon short bolt spacing and others resort to ground surfaces when using plane flanges. With a small motor or other accessory, where the areas subjected to explosion pressures are not large, the plane flange may be used without particular difficulty.

Cylindrical Flanges. A cylindrical flange, as the name indicates, is one in which the two surfaces are close-fitting cylinders made in a

lathe or boring-mill. This type is almost invariably used in combination with a plane flange, and is widely applied in permissible machines because accuracy of machining is comparatively easy.

Step Flanges. A step flange is a combination of two or more flanges not in the same plane and forming right angles or steps with each other. Step flanges are particularly advantageous where it would be impracticable or undesirable, owing to limited space, to use a simple plane or cylindrical flange. Also, it is more effective, when properly made, in stopping the passage of flame.

Irregular Flanges. The irregular flange is a combination of plane and cylindrical flanges either of which may not be continuous throughout.

The advantages of the flange joint over special devices for the relief of pressure are simplicity in design, lower cost, and permanence; and it is believed that the disadvantages of increased pressure and no ventilation are more than outweighed by these advantages.

MAIN FRAMES

Requirements of the Bureau of Mines for permissible machines are based on the assumption that by reason of the place of operation, the method of operation, etc., explosive mixtures of air and mine gas may accumulate within the casings and become ignited. Tests are therefore made in explosive mixtures of air and Pittsburgh natural gas for the purpose of determining whether those casings are strong enough to withstand the explosion pressures developed and also to determine whether the joints are capable of preventing the escape of flame. The pressures obtained vary widely according to the size and shape of the casings, but a general average will be about 90 pounds per square inch for casings of the totally inclosed type, although, as explained later, this value may be greatly exceeded. These pressures are of short duration and the strength of castings should be governed accordingly. If castings are to be used for the casings, due allowance should be made for the shifting of cores and other variations in casting, so that the casings will always have the full required strength. Designs should be so shaped that the internal free space is reduced as far as practicable. The less gas to be exploded within the casing the safer the equipment will be, all other factors being equal.

In designing the larger sizes of motors or other accessories it is advisable to avoid partitions or any form of construction that tends to divide the interior into pockets joined by restricted passages. The reason for this is that if the motor becomes filled with an explosive atmosphere and an ignition occurs in one pocket, the mixture in another pocket might be compressed by the first explosion before becoming ignited in turn as a result of that explosion. If sufficiently compressed, the explosion of the second pocket might develop a pressure disastrous to the casing. In some instances pressures of more than 280 pounds per square inch have been recorded.

High pressures are likely to be recorded with coal-cutting machines or similar equipment in which the casings of the rheostat and controller are incorporated with the motor in the main casting, and the compartments are connected through small openings.

There are three ways in which this condition can be remedied. (1) Make the castings strong enough to withstand any explosion pressure which might be developed; (2) completely isolate the several pockets or compartments from each other so that an ignition in one can not be communicated to another; or (3), arrange the internal parts so that any ignition will assure the ignition of all the contained atmosphere as one volume.

In the experience of the Bureau of Mines in testing permissible machines, several failures have resulted through the use of thin castings, these castings have been made of cast-iron or cast alloys in nearly every instance.

OPENINGS AND THEIR PROTECTION

For manufacturing reasons or for purposes of maintenance and inspection every machine has several openings or joints in its main housing. Any opening or joint is a possible path through which the flame may reach an explosive atmosphere surrounding the machine and thereby ignite that atmosphere.

Flange joints have already been discussed in detail. With carefully machined surfaces and a sufficient number of bolts or studs these joints can be made tight enough to prevent the escape of flame.

Bolt and Screw Holes. Other openings to guard against are bolt or screw holes. In most machines it is possible to eliminate all through bolts, and this should be done as far as practical.

The Bureau of Mines has approved motors having bolts or cap-screws through walls of motors for the purpose of supporting field pole pieces. In some cases the holes in the pole pieces did not extend entirely through them and therefore if one of the two bolts generally used were to come out, the metal of the pole piece would still safeguard the hole through the motor wall. It would be preferable to use studs securely fastened in the pole piece with nuts and lock washers outside; then, if a nut came loose, the hole would still be filled by the stud. From the safety standpoint it would be better to fasten the pole pieces from the inside with cap-screws so that no hole need be made through the motor wall. When cap-screws are used for securing commutator covers, etc., a large enough boss should be provided to give sufficient metal to drill and tap into without cutting through the wall. In case a cap-screw should accidentally or purposely be left out, no through opening into the interior of the casing of the accessory should result. By a little extra care in design and by strict compliance with drawings in the factory, this danger can be avoided.

Bearings. The third class of openings includes those through the bearing housings. By suitable design it is possible to stop all flames along the shaft, even if the oil or grease should be absent.

Plain Bearings. All of the common types of bearings have been successfully used in the construction of permissible machines. In any type of bearing where close running fits are required, the limits specified for diameter of bore, shaft, etc., should be closely adhered to in manufacturing.

A suitable bearing for a motor presents more of a problem than that for controllers, although the solution should not be particularly difficult, especially if space is not too limited. The tolerances to be allowed in machining should be specified in drawings. For example, a two-inch armature shaft may be made from 0.005 to 0.007 inch "small" and the bearing bushing from zero to 0.003 inch "large." In the extreme case, then, the maximum difference between the shaft and bushing diameters will be 0.01 inch.

In some designs of bearings, felt rings in grooves at the bearing housing have been used to prevent the entrance of grease into the motor proper. The Bureau of Mines does not accept such rings as a

means of protecting against the passage of flame, because they may become hardened with grease and not maintain their original tight fit or they may be left out by the repair man in overhauling the motor. The designer will be more certain of his equipment passing the Bureau's tests if he will make the bearing housing, next to the shaft, adequate. Recommendation to this effect is made to him when he applies to the Bureau of Mines for information along this line. Generally it is desired to apply a standard motor or at least as many standard parts as possible to the machine being made "permissible." In such a case the designer may object to making special bearing housings. The final proof of the safety of the bearings or of any other part will rest with actual tests in the Bureau's testing gallery.

Lubrication. The question of safe openings through which to admit oil or grease to bearings may at first trouble the designer, although it should not give any particular difficulty if one or two important points are kept in mind. It is, of course, essential that no opening be made directly into the interior of the motor. For ball-bearings a groove is generally made in the housing so that the grease is fed to the bearing from behind. The grease hole is protected by the portion of the bearing housing between the hole and the interior of the motor. Generally the testing engineers remove the grease-cups to determine by actual test whether the protection is sufficient.

Lead Entrances. A fourth class of openings consists of those through which electrical connection is made between the interior and the exterior of the motor or other accessory. When electrical connections are made by means of properly fitted insulated studs there is little likelihood of trouble from flames escaping at such lead entrance points. Openings around leads can be closed by asbestos-packed glands or by sealing the entrance with compounds of high melting point or with plaster of Paris. If the third scheme is employed, extra precautions must be taken so that if the compound becomes softened it can not flow and render the seal ineffective.

Stuffing-Boxes. In the second method of bringing a lead through a wall, the lead passes through a stuffing-box packed with asbestos wicking. This method is being widely adopted at the present time.

After the lead is in place, two or three turns of asbestos rope or wick are wound around the lead and this, after being pushed into place, is compressed by tightening a packing-nut. The shape of the recess in the stuffing-box is such that the tightening of the packing-nut forces the asbestos against the conductor, thus forming a very tight joint. The stuffing-box may be used in bringing a lead out of a machine or it may be applied inside of a machine when it is desired to take the conductor through a wall which isolates one part from another. Provision should always be made to lock the stuffing-box nuts after tightening.

Hand-Holes. A fifth class of opening is that made for inspection or renewal of parts, and in some cases for assembly. The protection provided for hand-hole openings is generally in the form of a cast cover held by bolts, nuts, or screws; thus, the degree of safety depends upon the width and type of flange joint as well as the number and type of fastenings. Other things being equal, a straight path is the least safe—that is, it requires more bolts to hold the parts together in such a way as to prevent flames from passing through the joints. On the other hand, thread joints have always proved to be very effective in stopping flames. Even one right-angle turn—that is, a step flange—generally adds considerably to safety, while two right-angle turns usually make an effective joint.

The various methods employed for protecting hand-hole openings include bolted covers, screw-covers, clamped covers, and sliding covers. These are discussed briefly below:

Bolted Covers. One large or several small covers bolted in place over openings of proportionate and suitable size have been more widely used than any other type of cover. As the size is increased, the number of bolts or other fastenings needed must also be increased in order to maintain tight joints. The large cover will, therefore, not be so desirable, and it is less easily and quickly removed or replaced than the smaller one.

Screw Covers. The screw type of cover is generally used where a handhole of four to six inches diameter is large enough, although very much larger diameters have been manufactured.

The advantages of the screw type of cover when properly made are as follows: (1) there are no bolts, nuts, and lock washers to be lost or mislaid; (2) with the proper tool, the cover can be quickly taken off or replaced; (3) the threaded joint is probably the easiest of any to make tight so that flames will not escape when an internal explosion occurs; (4) in most cases it can be determined by a visual inspection whether the cover is tight enough for safety. Without close inspection it is not so easy to determine whether bolts are tight and all lock washers in place when the bolted type of cover is used; (5) the screw cover is simple to lock in place with a padlock or some form of seal.

The disadvantages of the screw cover are as follows: (1) machining of such large diameter of threads may present some difficulties, not so much with the cover itself as with the casting into which the cover fits; (2) the circular opening may not be adapted for use with the remainder of the design; (3) the ease with which the cover may be removed might tend to encourage opening the compartment at times when it would be unsafe to do so.

Wedged Covers. Small covers designed for wedging in place have been unsuccessfully tried. These consisted of rectangular castings with two opposite edges tapering in thickness and fitting into similarly tapered grooves in the main casting. It was intended that tightly closed joints would result when the covers were forced into place. The difficulty with such a design is that extreme care is required in machining, otherwise the edges of the cover will be made to a taper different from that of the grooves, and therefore the cover will be tight in one place and loose in another. Dirt getting into the grooves or any rough spot on the cover edges may prevent tight closing of the cover.

Clamped Covers. Several manufacturers have designed controllers for storage-battery locomotives with special clamps for holding the main cover, instead of using bolts or screws for that purpose. The object sought was ease of access for inspection and maintenance. Since a controller for this service should have frequent inspection to see that it is in proper operating condition, it is obvious that the removal of from 10 to 20 bolts would tend to encourage neglect of proper atten-

tion. Clamped covers that would permit the opening of a controller in about the same time that one or two bolts could be removed would possess a certain advantage over the bolted type of cover. The clamps have not always proved successful, however, in that they failed to maintain the flange joints sufficiently tight to prevent the passage of flame—that is, the full benefit of the clamping action was not obtained where most needed.

Sliding or Ring Covers. Still another form of construction used to give quick and easy access to the interior of motors may be referred to as a "sliding" or "ring" cover. It consists of a ring accurately fitted to the motor shell so that it will readily turn about its axis. When the motor is to be opened for renewal of brushes, etc., the cover is turned about its axis until a radial opening in it matches with one of approximately the same dimensions in the motor shell. By making the metal around the openings broad enough, there will be ample protection against the discharge of flames. This type of cover is held in the closed position by means of padlocks.

Advantages of the sliding cover are as follows: (1) there are no bolts and nuts to become lost or misplaced; (2) it affords a convenient means for obtaining an opening into the motor, thus expediting inspection.

The disadvantages of this type of construction are: (1) that it is difficult and expensive to machine thin castings accurately; (2) that, unless the cover has been properly maintained by lubrication, rust or corrosion may cause it to bind and so hamper or entirely prevent moving it.

Some operators object to equipment with a large number of bolts because it is hard to keep them tightly in place. It might be questioned whether these same operators would maintain locks and seals any more than bolts but, if safety in the mine is given due consideration, mine discipline and inspection will result in safe equipment with either method of fastening.

FASTENINGS

Bolts and Studs. Covers and sections of casings must be held in place in a substantial and effective manner. Bolts, studs, screws, etc., especially those that are frequently removed, should be generously

proportioned in order that there shall be no stripping of threads, or failures as a result of the pressures developed within the accessory by the internal explosions to which any equipment may be subjected in a gaseous mine and to which all permissible inclosures submitted for approval are subjected by the Bureau of Mines. The necessity for special attention to bolt sizes is seen when it is remembered that the explosion pressure sometimes exceeds 100 pounds per square inch.

Not only is the size of fastenings important, but the spacing of fastenings is equally so. Such fastenings should be spaced so that the casing covers will not spring between any two points and thereby produce an opening in the joint.

Locks and Seals. In some designs, such as that for the sliding cover, bolts and studs are not needed in maintaining a tight joint, and a lock or seal is depended upon to keep the cover in place. This method, when properly designed, insures a readily accessible compartment, but the ultimate safety of the outfit depends upon the operator always having the key in the hands of reliable and responsible men. The same argument applies to the use of seals, except that tampering with a seal can be more easily detected and it would be more difficult to counterfeit the seal than to fit an extra key to the lock. Neither lock nor seal should be removed in a gaseous section of a mine, nor should bolts be taken out to remove covers in such places.

In other designs the hand-hole covers are screwed into place instead of being bolted. Because of the ease of removing covers of the screwed type, they also need sealing or locking after being screwed into place.

Strain Clamps. On portable machines such as coal cutters and drills, where a length of flexible cable is attached, a clamp of insulating material should be provided. The purpose of this is to take any mechanical strains, such as arise from jerking on the cable, which might otherwise come on the terminals or lead entrance to the machine. Before the cable reaches the strain clamp from the outside it should come through a bell-mouth entrance that opens out with smooth rounded surfaces which permit flexure of the cable without cutting it.

APPARATUS NEEDING SPECIAL ATTENTION

Resistance Boxes. The same general rules as to covers, joints, lead entrances, and other parts which have been considered, also apply to the design of casings for the resistances used to control the speed of motors. The chief hazard in resistances is arcing from broken or burned resistance elements. In recent years, designers have directed their efforts towards producing resistance grids of material other than cast-iron, which is easily broken. Grids of special alloys and punched-steel grids which do not break under ordinary operating conditions are now available, thus reducing to a minimum the dangers of arcing from broken grids. The Bureau of Mines, however, requires a permissible inclosure for the resistance because there are other points besides a break in the grids where an ignition of gas might originate. These are as follows: (1) arcing at loose terminals resulting from expansion and contraction when the grids are heated and cooled; (2) arcing between grids resulting from sagging together due to overloading through careless operation; (3) arcing when grids "open-circuit" by burning through after repeated overloading.

Resistance elements should be generously proportioned so as to have ample capacity to meet the severe conditions imposed on mining equipment. This is of special importance where the resistance-box is a separate unit requiring conductors going from it to another accessory to be run outside of a permissible casing. If the resistance elements are not large enough, the heat will be carried out along the conductor with probable damage to the insulation.

Controllers and Switches. The main problem in controller design is to combine accessibility with adequate protection. From the operating standpoint it is desirable that the controller be easily and quickly opened for inspection and repairs. If a cover of comparatively large area is used, a flange joint will require a large number of bolts or cap-screws if it is to be kept tight. Some designers have, therefore, avoided the bolted joint as far as practical when designing controllers.

Every permissible machine should have incorporated in its design a switch or switches by means of which it will be possible to cut off the power supply from the motor or motors, independently of the controller. For a direct-current machine, a double-pole switch or two single-pole switches must be used to fulfil this requirement. In other

words, it should be possible to open each conductor of the feeding and return circuits at the machine so that, in case the controller could not be returned to the "off" position, the motors could be stopped by opening the switch or switches. If insulation fails within the machine, and the frame of the latter is thus made alive, the operator will have a degree of protection from shock when the switch permits opening of the circuit.

Fuses and Circuit-Breakers. The protection of a machine and its wiring, including the cables connecting it with the power circuit, should be carefully considered. Protection may be obtained by means of fuses or circuit-breakers. The general custom has been to employ fuses for this purpose. Of itself, the fuse is easily adapted to permissible designs, but the specification in Schedule 2B of the Bureau of Mines that automatic circuit-interrupting devices shall be designed so that they "may be reset or renewed quickly and conveniently without meanwhile causing any of the permissible features of the equipment to be less effective," generally adds complication in the way of interlocking mechanism to the design. The necessity for opening fuse boxes is reduced by a multiple-fuse arrangement which permits the placing of two, three, or more new fuses in the circuit successively without opening the box at each change. This arrangement is permitted, provided the fuse box is locked or sealed to prevent tampering by unauthorized persons, but when the last fuse has been used or "blown," new ones should be inserted only by the person authorized to do so. If the fuses are not interlocked with the main switch so that there is nothing to prevent their being inserted in or removed from a live circuit when the fuse box is open, the machine must be taken to fresh air where the work can be done without danger of igniting gas. The multiple-fuse design may be made to be used as a switch, thus combining two permissible casings in one. Fuses, like switches, must protect all the conductors that are included in a circuit. The great objection to fuses has been that fuses of larger capacity or even pieces of solid copper wire have been inserted in place of the regular fuses, in order to obtain continuity of service, regardless of abuse to the machine to be protected.

Circuit-breakers are now coming into more general use. A circuit-breaker having a reset button extending through the wall of

the permissible casing will tend to prevent continued overloading of a machine if it is so designed that the circuit-breaker can not be held in. The initial cost is largely responsible for their not being used on this class of equipment to a still greater extent.

WIRING OF PERMISSIBLE EQUIPMENT

Internal Wires. No special requirements for the insulation and protection of wires within permissible compartments other than those already accepted in the manufacture of equipment for mining service have been made by the Bureau of Mines.

External Wires. In designing permissible apparatus, too little consideration has been given to what may happen outside of permissible compartments. On the outside of compartments the electrical parts that need the most attention are the wires and the points where wires terminate.

The factors governing safe wiring are many, depending upon the size, length, service, and liability to mechanical injury. Stationary apparatus presents a less complicated problem than portable equipment.

Trailing Cables. Portable equipment is usually provided with a cable termed a "trailing cable," which is generally from 300 to 500 feet in length. Such cables, if armored, would be very expensive, impracticable to reel, and almost prohibitive for practical service. The custom therefore has been to leave such cables without mechanical protection. In the earlier approvals the Bureau of Mines did not attempt to approve the trailing cable but left this question entirely to the judgment of the manufacturer and the user. The Bureau required only that the strain on the cable should be taken care of so that there would be no pull on the terminals where the cable was connected to the machine.

As the approval work advanced, the Bureau of Mines became convinced that more attention should be given to trailing cables, and in January 1922 a conference was called at the Pittsburgh Experiment Station to discuss this question with manufacturers of machines and cables.

As an outcome of this conference, a better grade of trailing cable has been used on all permissible machines, and the Bureau is now

engaged in making tests on cable in an effort to determine its suitability for this service. At present, such cables as are recommended by the manufacturer of portable machines are tentatively approved. Since 1922 a requirement has been in force that all trailing cables must be protected by a fuse or a circuit-breaker; also that only approved cable is acceptable for renewals.

Cables having all-rubber insulation, with 60 per cent. high-grade rubber on the outside (which serves as a wearing surface as on the tread of an automobile tire), are at present generally used on permissible machines. These cables cost more than the former braid-covered cables but have proved to be more economical through their much longer service, and they are far more acceptable for permissible machines.

Another factor considered in connection with trailing cables is the manner of attachment to the feeder circuit. Various means have been approved for doing this where arcs or flashes will not constitute a hazard. For such places, the main consideration is that a handle shall be provided at the end of a trailing cable which will permit such connection without shock to the machine operator. Fuses may be assembled in the same handle, although this is not required by the Bureau of Mines if the operator protects the cable by a fuse or circuit-breaker in some other manner. When the connection is not to be made in intake air, permissible junction boxes should be used. The short cable on coal-cutting machines between the machine and the reel is subject to the same insulation requirements as the trailing cable.

Stationary machines such as room hoists and pumps will in many cases have feed wires in sections beyond the intake air. Such wires should be protected from falls of roof by ample timbering. Where this is impracticable, armored cable might be used. Such feeders should be protected by a fuse or a circuit-breaker.

Wires between Permissible Inclosures. Both stationary and portable machines frequently have two or more compartments separated from each other, making it necessary to run wiring outside of permissible inclosures. To meet the schedule requirements, it is necessary to safeguard such exterior wiring by using some kind of a raceway for the wires. This raceway may take many forms, but, unless carefully considered, the wire may be more readily damaged by the raceway itself than if it were run in the open. In stationary equipment, wires

can be run in a rigid conduit and terminated in suitable junction-boxes near the point where they pass through the wall of a permissible compartment. If no rough edges are left at the ends of the conduit, and suitable junction-boxes are provided, this scheme of handling wiring between compartments that are stationary—or, at least, stationary with respect to the parts under consideration—should prove satisfactory. However, care should be taken not to injure the wires when placing them in conduit and the conduit itself should be adequately fastened in place at frequent intervals along its length and secured at the points where it enters the junction-boxes.

When there is any considerable movement of one compartment with respect to another, the problem of wiring between them is much greater. A certain degree of flexibility must be permitted in order to allow the wires to move with the machine. This is generally done by using a flexible armor or an equivalent raceway for at least part of the wiring. Because of the movement, more care must be given to secure the ends of the armor to prevent strain on terminals and abrasion of the insulation.

Where cables have considerable movement, such as the cable on a turret machine, extreme care should be exercised to support the armor and cable properly and prevent strains on terminals or abrasion of the insulation within the armor. Frequent inspections should be made of the wiring to make sure that no unsafe condition has arisen.

Flexible Conduit. Among the developments in flexible conduit is the type made up of two wires wound together spirally. This gives considerable flexibility and mechanical strength, but in common with all other metal conduits is subject to corrosion. Rubber air hose is being largely used as a substitute for metal conduit. Thus the inclosed cables have, in addition to their own insulation, the insulation of the hose. Rubber air hose offers the advantage of returning to its original shape after being flattened.

Conduit must be securely clamped or held at its ends and at other points where movement is undesirable, otherwise it may chafe and cut into the cable inside of it. This is particularly essential in the case of metal conduit. The ends of the hose may be held by a flange coupling which is firmly held to the hose by a brass ferrule expanded inside against the coupling.

CONCLUSION

In a paper of this length it is not possible to cover all the points of design that might arise in a single outfit, and, when the multiplicity of uses for permissible motors and accessories is considered, it is evident that from time to time there will be many problems which have not been adequately covered and will need individual attention. However, I trust that the paper will be useful in interpreting the intent of Schedule 2B and that where points are still in doubt designers will feel free to ask for a conference, as conferences are always helpful in bringing about an understanding of the methods best suited to meet the requirements for safety.

THE HIGH-PRESSURE POWER-STATION*

By Edward W. Norris†

The boilers and turbines used on high-pressure steam stations have been very fully described by Dr. Jacobus and Mr. Warren in papers before this Society. It may be interesting to consider the general features of design of a complete station, and this paper presents some of this information regarding the Edgar station. This plant of the Edison Electric Illuminating Company of Boston was the first to use high-pressure steam commercially. To the notes on design is added an outline of the experience obtained in a little more than two years of operation.

The design of the Edgar station was started about five years ago, at the time when higher steam pressures were first being considered. The question arose immediately as to what pressure should be selected for the new plant, and this question was answered by a very careful study of steam economics.

A consideration of the characteristics of the boilers and turbines indicated that the savings to be obtained from higher steam temperatures would more than balance the additional cost of generating them. For this reason the highest available superheat was chosen. Owing to the limitations of materials available for piping, valves, and machine parts, 700 degrees F. was taken as the limiting temperature. This allows a safe margin for fluctuation unavoidable in a commercial plant.

The effect of pressure is analyzed in the curves shown in Fig. 1. Curve 1 shows the total heat available in a pound of steam at 700 degrees F. and varying pressures. It is nearly constant, but falls slightly at higher pressures. Curve 2 shows the heat in the steam after expansion to 29 inches of vacuum. The distance between curves 1 and 2 is the heat available for power generation. This has been plotted in curve 3 as a percentage of the total heat in the steam at 700 degrees. Notice that the available heat—that is, the effectiveness of the system—increases with pressure. The heat actually turned to useful work is

*Received for publication July 21, 1928. [This paper relates directly to "Developments in High-Pressure Boilers," by D. S. Jacobus; and "High-Pressure Steam-Turbines," by G. B. Warren, published in Proceedings of December 1927, v. 43, p. 389-427.—Ed.]

†Engineer, Division of Construction and Engineering; Stone & Webster, Inc., Boston.

equal to this available heat multiplied by the efficiency of the turbine. Owing to higher windage loss, higher leakage, and other subsidiary considerations, the efficiency of the turbine decreases as the operating

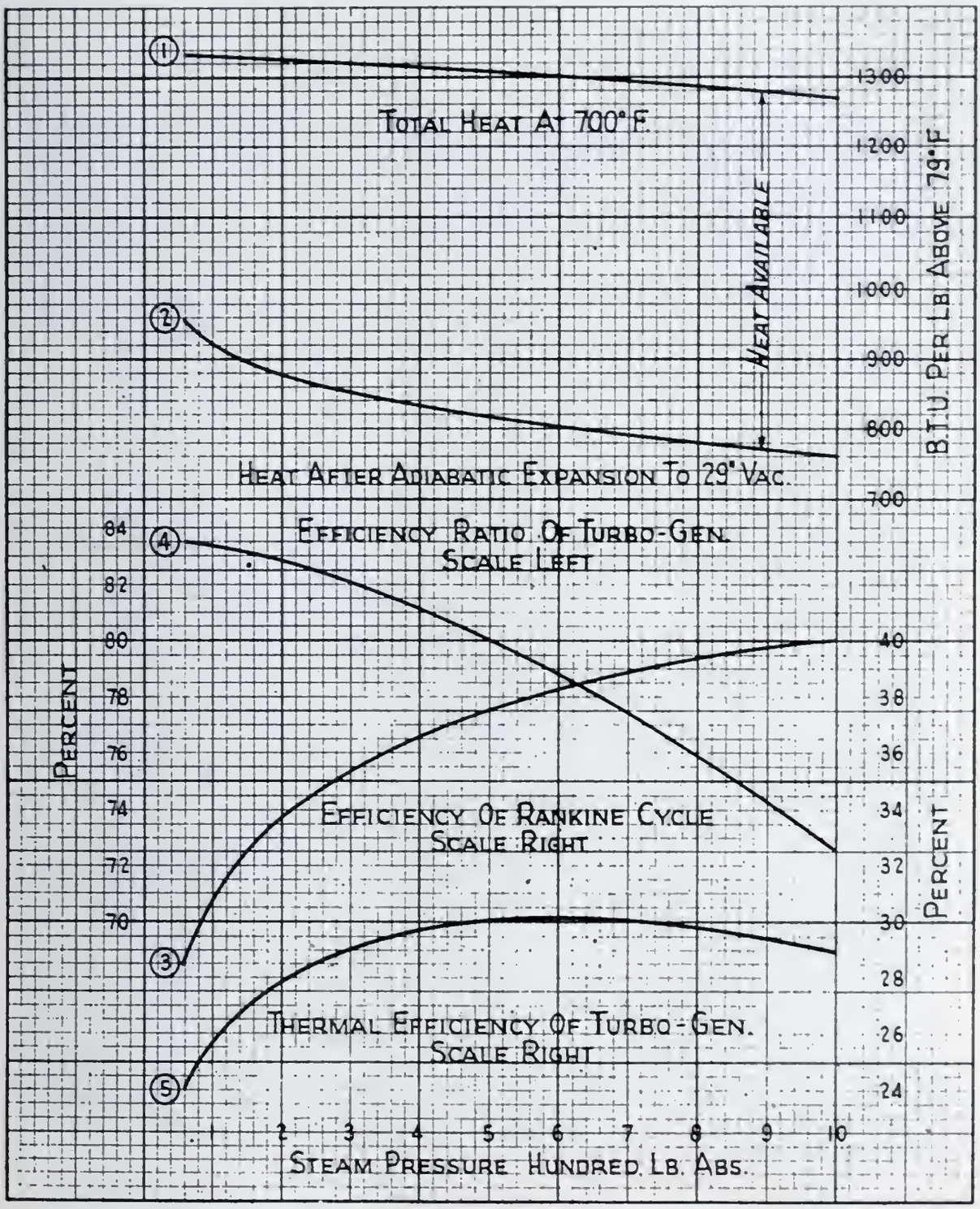

Fig. 1. Effect of Steam Pressure on Thermal Efficiency of Turbine.

pressure increases. This decrease is accentuated by the loss in effective superheat, as the total temperature of the steam can not be raised with the increasing saturated temperature at higher pressures. Curve 4

shows the average efficiency of large turbines built for different pressures. Multiplying the values for curve 3 by those for curve 4, the actual percentage of heat turned into work at the turbine coupling is obtained and is shown on curve 5.

It is apparent that 600 pounds would be approximately the most efficient point on purely theoretical grounds. When the cost of equipment for the Edgar station was considered in relation to the cost of fuel, it was evident that the gain from 350 pounds to 600 pounds would not justify the expense of the heavier equipment. The station

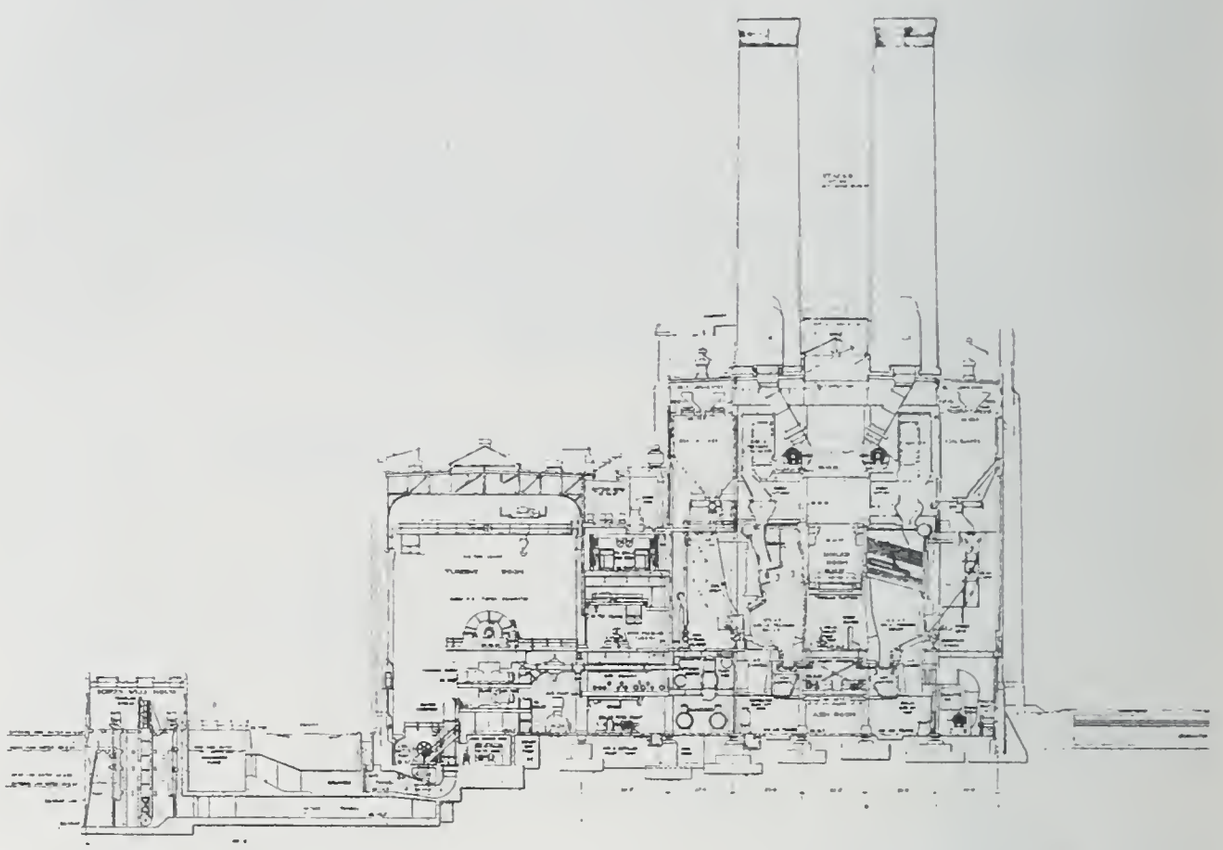

Fig. 2. Cross-Section of Edgar Station, Edison Electric Illuminating Company of Boston.

was, therefore, designed for an operating pressure of 350 pounds at the throttle.

A further consideration in the thermal efficiencies, however, is the fact that by expanding the steam in two turbines similar to the two parts of a compound steam-engine, and reheating the steam between the two units, much of the loss in turbine efficiency at higher pressures can be regained. This "reheat system" must be given careful attention, and, by this means, the higher steam pressures are made effective and economical.

In designing the station it was decided that if such a high-pressure plant could be kept in continuous operation the savings possible would fully justify its installation.

The saving in cost of fuel and the increased capacity resulting from higher pressures, compared with the corresponding increase in

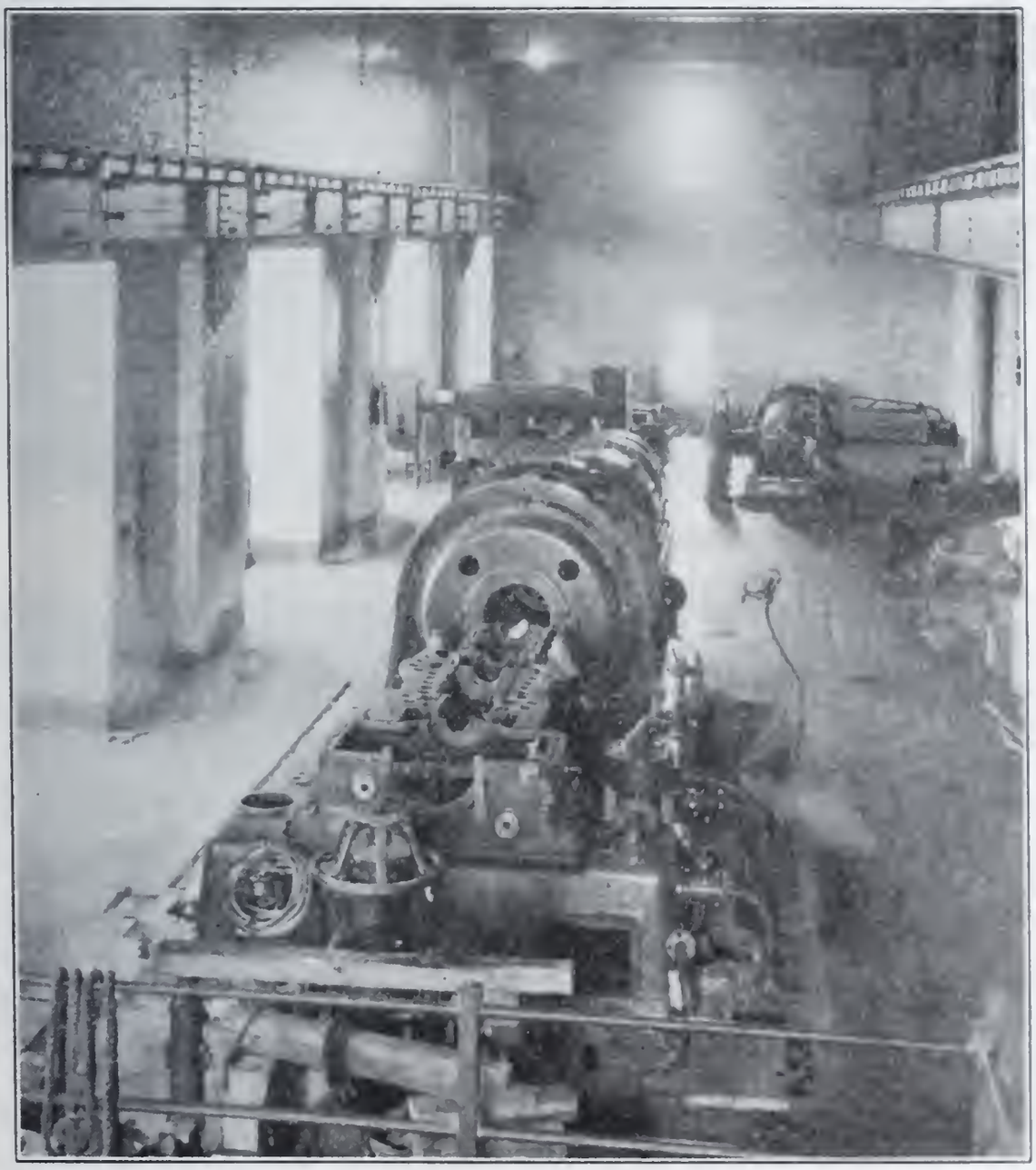

Fig. 3. Turbine During Erection.

equipment cost indicated that the highest available pressure could be used to advantage at the Edgar station. It was therefore decided to install a steam plant designed to operate at 1200 pounds pressure at the boiler drum, and to develop about 15,000 kilowatts. This pressure was chosen as the highest commercially available at the time, and the

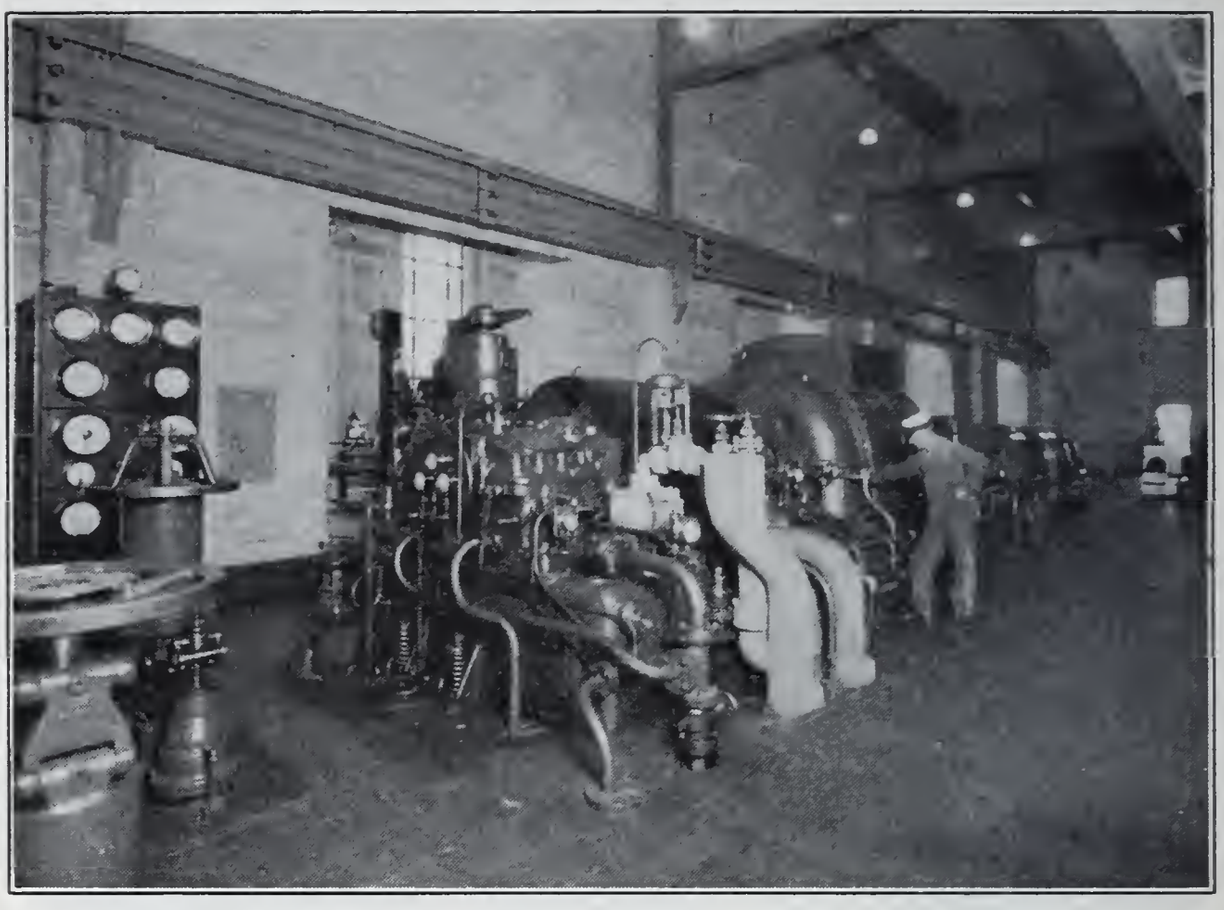

Fig. 4. Turbine in Operation.

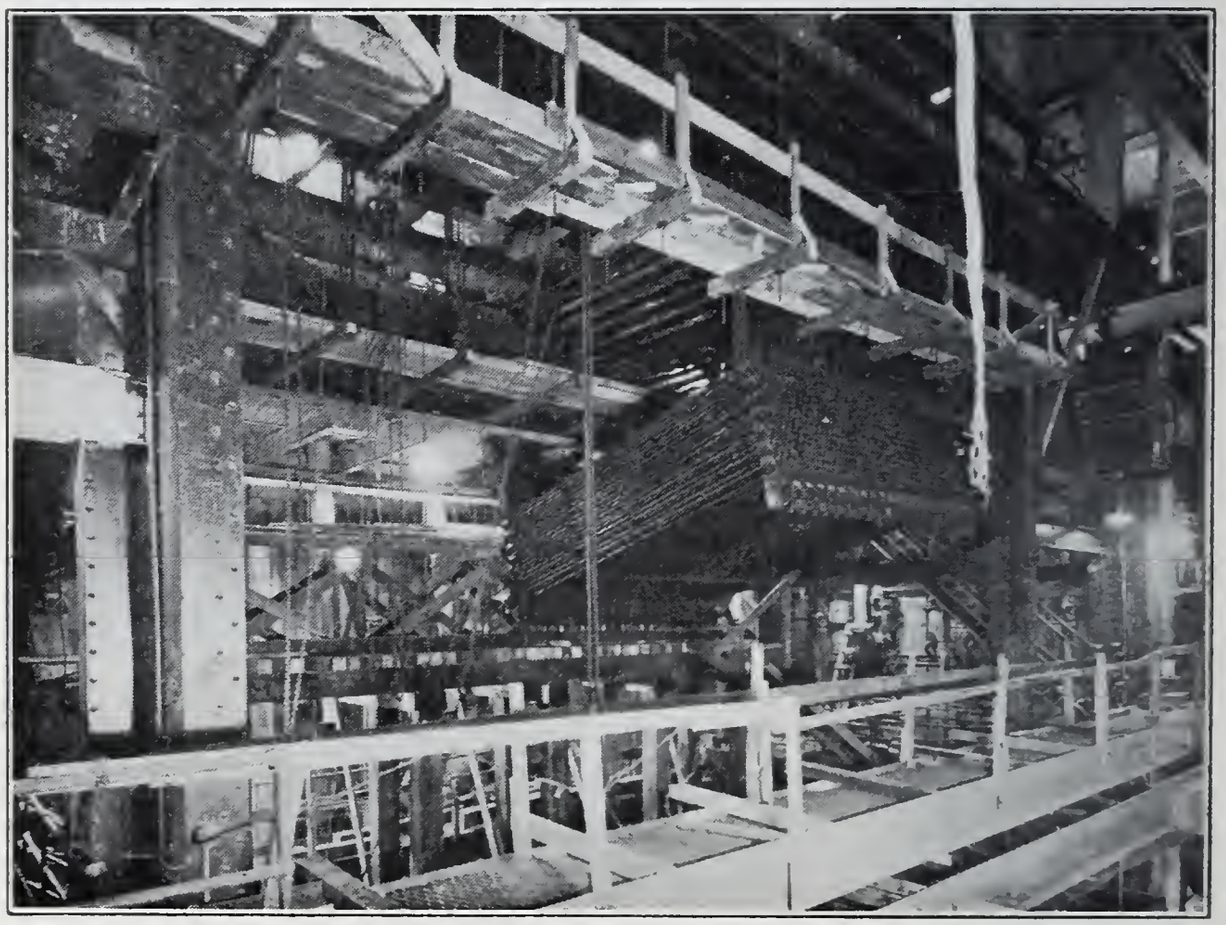

Fig. 5. Boiler During Erection.

capacity as that which could be conveniently absorbed continuously by the system load throughout the year.

The initial installation consisted of two primary units of 30,000 kilowatts operating on 350 pounds, and a 1200-pound boiler and turbine set installed very largely for base-load operation. To guard

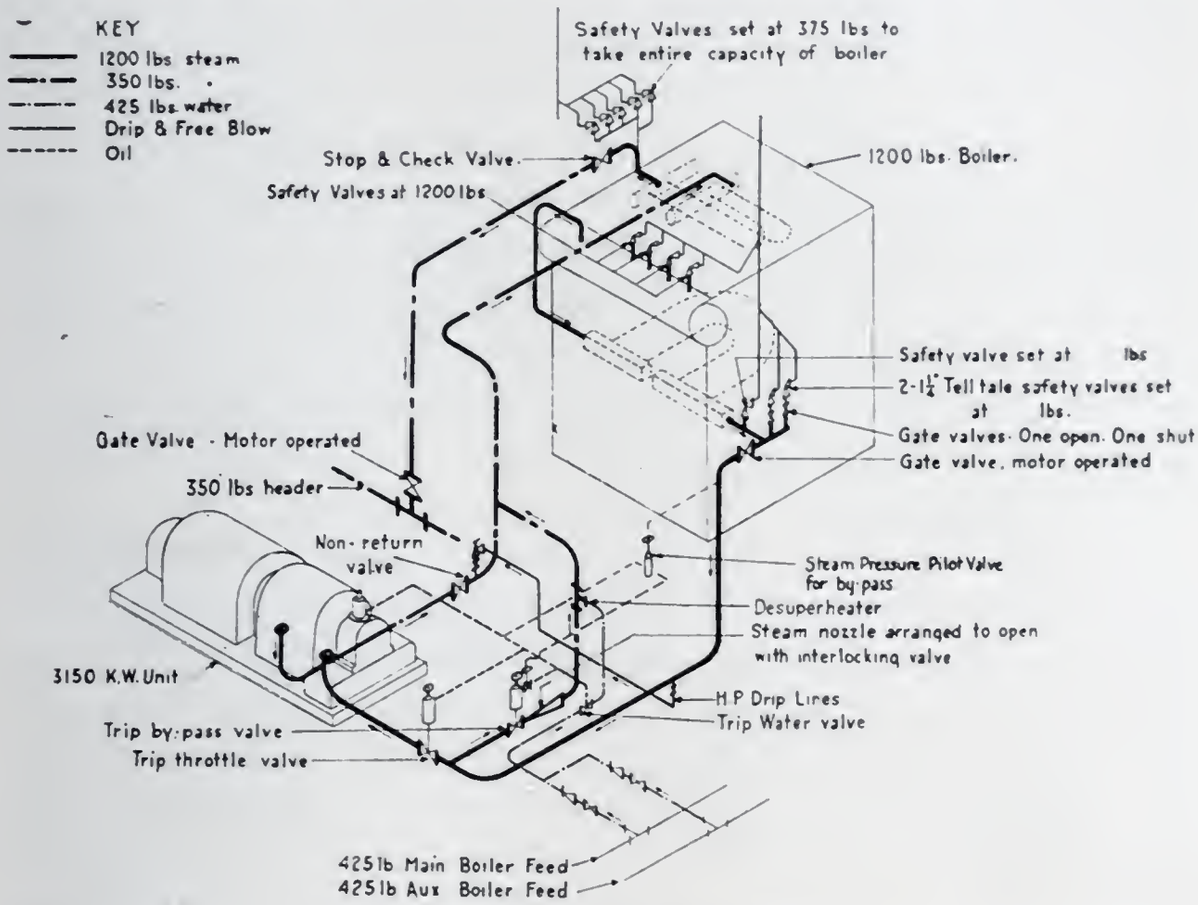

Fig. 6. Steam-Flow Diagram.

against loss in case trouble should develop with the untried high-pressure equipment, the design included convenient means for conversion to straight 350-pound operation should it be found desirable. Experience showed later that this was unnecessary, but at the same time the initial investment had been wisely safeguarded.

Fig. 2 shows a cross-section of the station; Fig. 3 shows the 1200-pound turbine during erection; Fig. 4 shows the turbine in operation; Fig. 5 shows the 1200-pound boiler during erection; and Fig. 6 is a steam-flow diagram of the installation.

The boiler is of approximately the standard cross-drum design with an interdeck superheater connected directly to the throttle of the turbine. The exhaust of the turbine passes back into a reheater and thence to the main header at the normal pressure of 350 pounds.

During design, the question came up as to what would happen if the high-pressure turbine should trip out when under heavy load. To meet this contingency a by-pass was designed to take steam from the 1200-pound steam header and exhaust it directly to the reheater and thence to the 350-pound header. This consists of a nozzle designed to pass the same amount of steam that the turbine would pass at the same pressure. Steam is admitted by a trip valve similar to the trip throttle-valve on the high-pressure turbine but opening instead of closing when tripped. The two valves were connected in parallel, and arranged so that, should the turbine trip out, the by-pass would open simultaneously and discharge the same weight of steam through the reheater into the 350-pound system. When tested, the boiler and turbine were brought up to full pressure, and full load applied to the turbine. The turbine was then tripped out and with the exception of a slight tremor there was no indication of a change of rate in the flow meter connected with the boiler.

General operating experience with the plant has shown that it has been practically free from what might be called high-pressure troubles. The first boiler has been operated for more than a year, and has not given any trouble from the pressure end. Gaskets in the hand-hold covers gave some trouble until a material was found which fitted the conditions of water, etc., and no trouble has since been experienced.

The maintenance of the water-level in the boiler drum was looked upon with a good deal of misgiving when the plant was designed. Dr. Jacobus mentions the glasses used in the water columns. They have been quite satisfactory. When the installation was first started there were no automatic regulators for water-level, and hand feed was used. That was not altogether satisfactory as the water requires a good deal of attention in modern boilers operated at high capacity. Feed-water regulators have since been installed, and these operate well.

Experiments were carried on to determine whether or not the boiler was abnormally sensitive to foaming. The by-pass valve was tripped open with the boiler under load, to determine whether such an increase in boiler output would cause priming. The load was increased more than 50 per cent. within a few seconds, and no trouble was discovered at all except when the water was practically out of sight in the top of the glass, which, of course, is not an operating condition.

There was no trouble whatever with safety-valves.

The general combustion system worked out very well. There was no trouble in controlling the boiler and obtaining proper combustion conditions. Owing to the two-inch tubes directly over the fire, there was some trouble at comparatively high ratings due to the slag carried up into the lower rows of tubes. On the later boilers the design involves larger tubes on longer centers, which is expected to correct this difficulty.

The turbine has given a very good account of itself. It was examined after about 2000 hours of service and found to be in practically perfect condition, although a certain amount of foreign material had found its way into the blading. As a result of this there was a certain amount of distortion in the edges of some of the blades. The machine was cleaned and the blade edges straightened. Since then the turbine has been in continuous service about a year. The machine governs well and there is no trouble in synchronizing and putting it on the line.

Naturally, great care was taken to design all the details, piping, etc., so as to avoid high stresses due to temperature and pressure, and the system has been entirely successful. Pipe-joints are of the bolted type, in which the pipe ends are vanstoned and welded, to avoid the use of gaskets as far as possible. Gaskets have been used with success in certain parts of the plant that require dismantling, such as safety-valve bases.

The valves have not given the slightest trouble. The by-pass nozzle after the initial preiod of operation was examined and found to be in perfect condition.

In the matter of efficiency, no formal tests have been made on the boiler and turbine, but operating figures have been plotted, based on readings of ordinary operating instruments, and these indicate that with about one-third the total output of the plant coming from high-pressure steam, the efficiency is increased about four per cent. over the results obtained with 350-pound steam exclusively. This would give about 12 per cent. with a straight high-pressure plant, which checks Mr. Warren's figure of 13 per cent. very closely.

A question that is frequently asked relates to the power for boiler feeding. The boiler feed for a 1200-pound steam plant, of course, requires more power than for a 350-pound plant. The difference,

however, was included in the four per cent. increase in efficiency already mentioned. In other words, there appears to be four per cent. net improvement based on power output from the plant.

The question of cost is also frequently raised, but this is obviously one that varies widely with locality. One of the first items considered is the added cost of high-pressure equipment, but as this depends largely on individual plant requirements no general answer can be given. Regarding Mr. Warren's remarks—for a given size of plant there is an increase in output corresponding to higher pressure. In other words the kilowatt output is larger with higher pressure than it would be with lower pressure for the same flow of steam. This offsets to a large extent the additional expense. The additional expense is derived from parts of the boiler, the high-pressure turbine, and the piping. The low-pressure part of the plant is exactly the same. While the cost of a part of the plant is increased, the output is increased correspondingly. Local conditions determine the exact relations, so that cost figures can be quoted only in these general terms.

The first high-pressure installations have proved so successful that new plants of this type are being constructed in a number of localities where conditions favor highly efficient installations. The capacities of boilers and turbines are being steadily increased and, as experience is gained in operation, the high-pressure equipment is being used for complete plants rather than for "base-load" service only.

SOME NOTES ON THE COALESCENCE OF NON-METALLIC INCLUSIONS IN STEEL*

By C. H. Herty, Jr.†

SOURCE OF INCLUSIONS

There are three sources of non-metallic inclusions in steel (1) from the pig-iron or scrap; (2) oxidation of metalloids in pig-iron and scrap; and (3) deoxidation of the finished steel.

1. Inclusions in the pig-iron consist of suspended materials that have not been reduced in the blast-furnace and which are usually silica particles or iron silicates high in silica. Inclusions of this type are often infusible at steel-making temperatures and may persist in the steel to the finished product. As a rule, inclusions in the scrap charged consist of iron or manganese silicates, and alumina or other oxids resulting from the deoxidation of other heats of steel. If plant scrap is used in the charge, and a large part of it is taken from top discards or hot tops, the non-metallic content of the scrap will be high, and some of these inclusions may be difficult to eliminate from the steel.

2. In general, the inclusions from the oxidation of the metalloids contained in pig-iron and scrap are not harmful, inasmuch as they are formed at the slag-metal surface and probably go into the slag very rapidly. If very high silicon pig-iron is used, some silica particles may be formed and not completely eliminated in the refining process.

3. Inclusions formed by the final deoxidation of the steel are the third and largest source, and may be grouped into three classes: (a) manganese oxid and iron oxid in rimming steels; (b) iron and manganese silicates and alumina in semi-killed steels; and (c) manganese silicates and alumina in killed steels. Special deoxidizers such as titanium, zirconium, vanadium, etc., form characteristic inclusions which may or may not be eliminated from the steel, depending upon their physical characteristics.

TYPES OF INCLUSIONS FORMED BY DIFFERENT DEOXIDIZERS

Each deoxidizer forms a type of inclusion which may be fairly readily distinguished under the microscope. Fig. 1 and 2 show the

*Presented February 28, 1928. Received for publication August 2, 1928. (Published by permission of the Director of the U. S. Bureau of Mines; the Carnegie Institute of Technology; and the Metallurgical Advisory Board. Not subject to copyright.)

†Physical Chemist, Pittsburgh Experiment Station, U. S. Bureau of Mines.

various types of inclusions formed in cast-steel on deoxidation with some of the common deoxidizers. The steels were made in the electric-furnace laboratory of the United States Bureau of Mines in Pittsburgh. In Fig. 1, A shows the type of inclusion formed on deoxida-

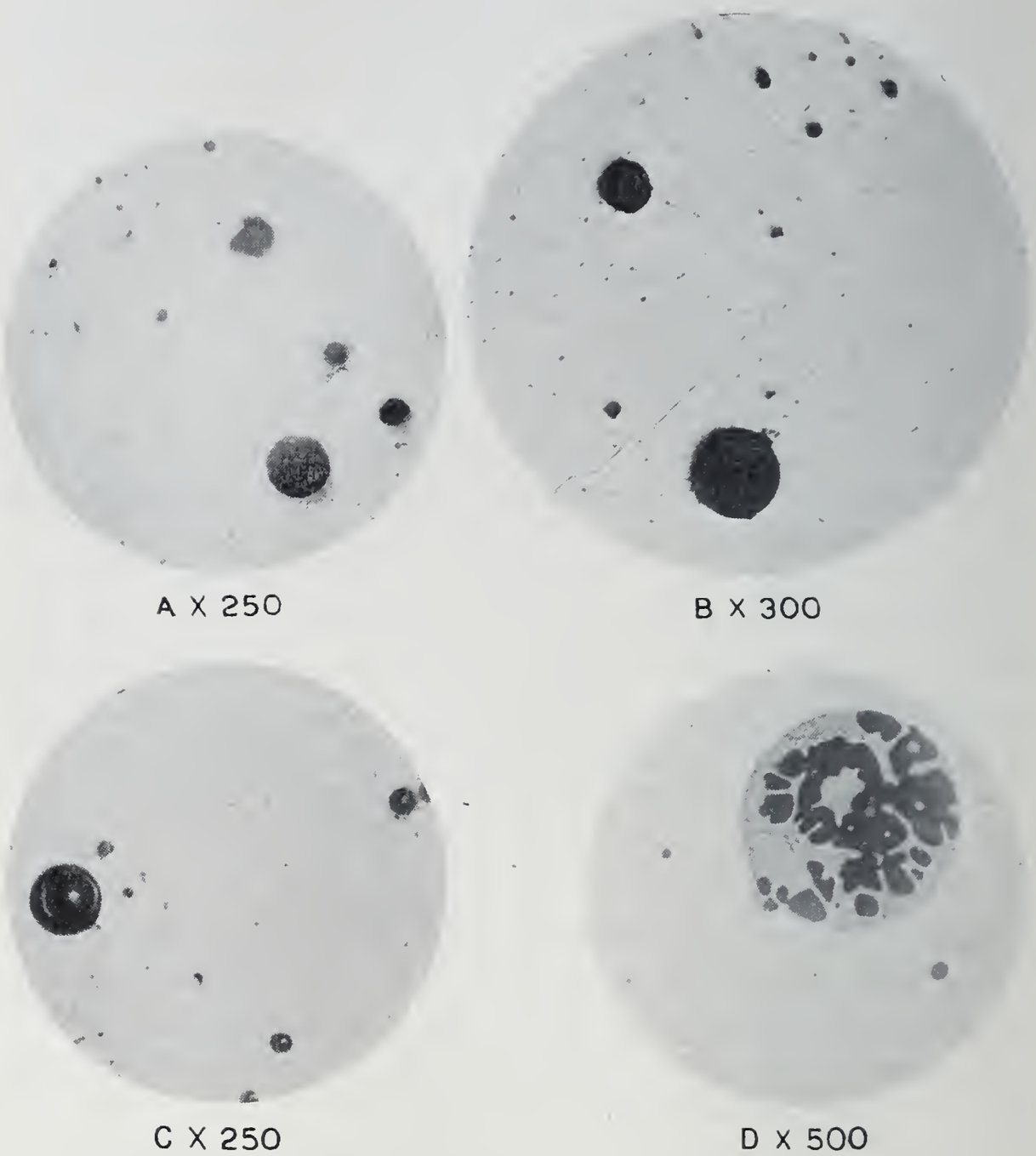

Fig. 1. Inclusions Formed on Deoxidation.

tion with manganese, a dove-gray, rounded inclusion which has the general characteristics of a high-iron ferrous silicate. This inclusion is probably a solution of iron oxid in manganese oxid. Fig. 1, B and C show two types of ferrous silicate—the first high in iron oxid and the

second high in silica. The first type (Fig. 1, B) is often found in wrought-iron and the type shown in Fig. 1, C is found in steels dead killed with ferro-silicon. Fig. 1, D shows the type of inclusion formed by deoxidation with a titanium alloy containing 15 per cent. titanium and 17 per cent. silicon. This inclusion is really a double silicate of iron and titanium.

In Fig. 2, A and B show two types of alumina inclusions, the first high in iron oxid and the second almost pure Al_2O_3. The first

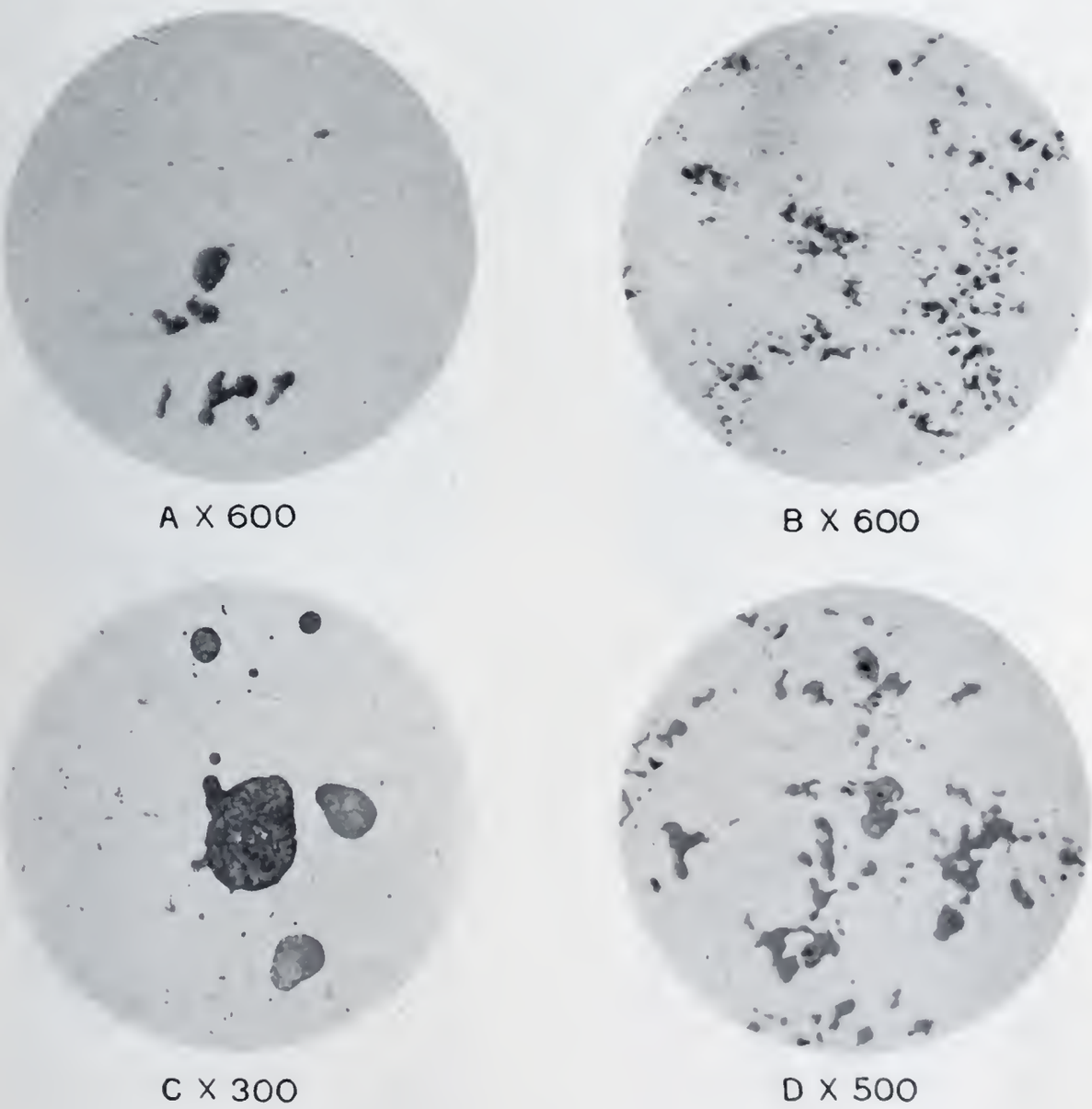

Fig. 2. Inclusions Formed on Deoxidation.

type is sometimes found in rimming steels where a small amount of aluminum is added, and the second type is always present in killed steels if aluminum is used. Fig. 2, C shows the type of inclusion

formed on deoxidation with silicon-zirconium, an alloy containing 45 per cent. zirconium and 48 per cent. silicon. Fig. 2, D shows a typical inclusion from a steel killed with ferro-vanadium.

THE COALESCENCE OF INCLUSIONS

The larger a non-metallic particle is, the faster it will rise out of the steel bath, the rate of rise being proportional to the square of the diameter of the particle for inclusions of the same specific gravity. It is thus highly desirable that inclusions formed on deoxidation should coalesce as rapidly as possible in order that they be eliminated from the steel before it is cast. The primary factor in the coalescence of the inclusions is the melting-point of the inclusion. If the inclusion has a melting-point higher than that of the steel bath, no

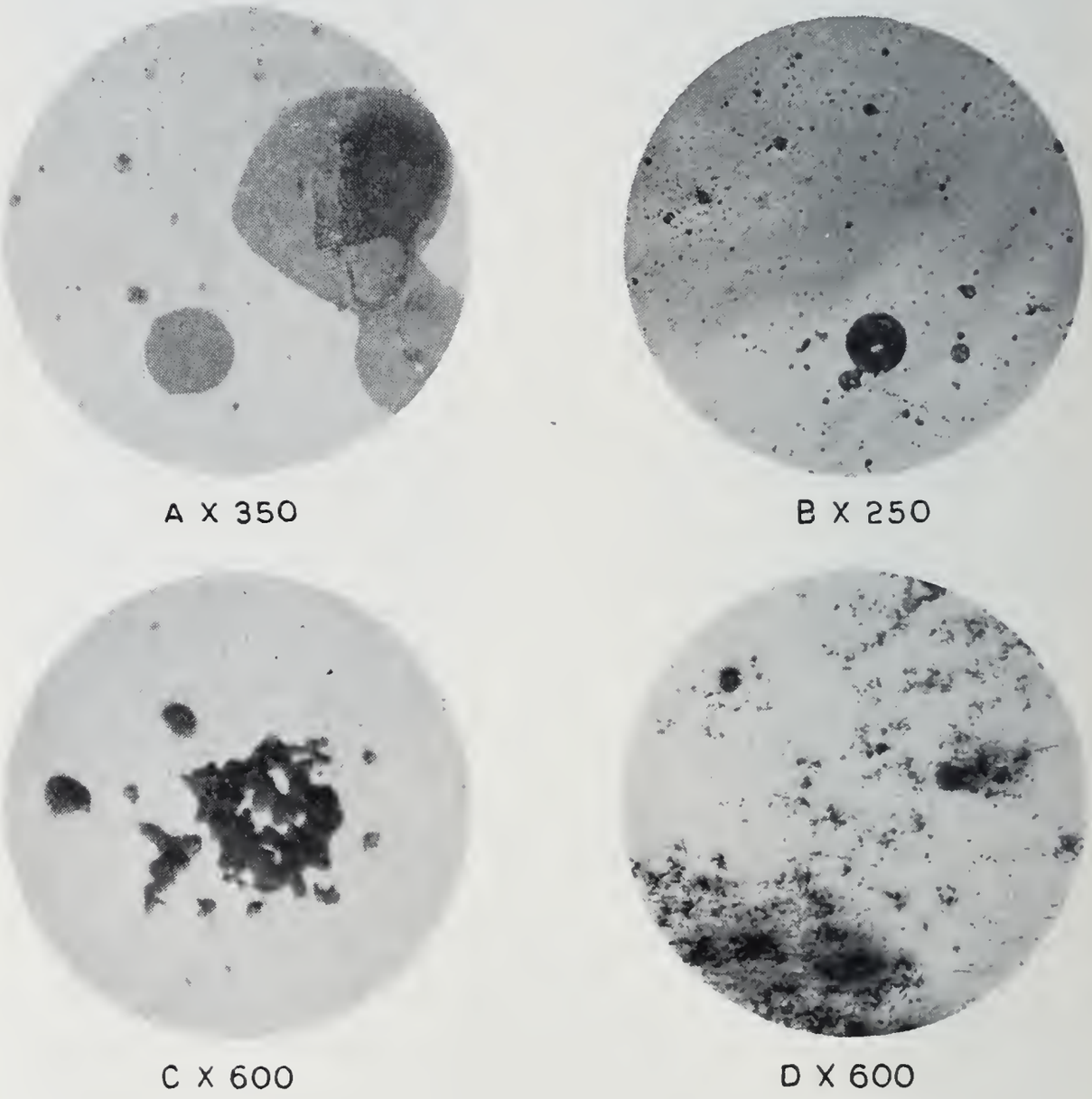

Fig. 3. Coalescence of Non-Metallic Inclusions.

coalescence can be expected, although the inclusions may coagulate in the steel to form clouds of particles. If the melting-point of the inclusions is lower than that of the steel, coalescence may be expected, and the higher the fluidity of the particle the greater the rate of coalescence. Surface tension effects also enter into the coalescence of two dissimilar types of particles, but for particles of the same type these effects may be neglected. Fig. 3, A shows the coalescence of two iron oxid particles in steel which was at a very high temperature when poured. The iron oxid came out of solution during cooling to the solidifying point, and two particles are shown in the process of coalescence. Fig. 3, B shows the coalescence of two silica particles. It will be noted that the particles had not reached a very large size because these particular inclusions had a fairly high melting-point. Fig. 3, C shows the coalescence of iron-aluminate particles which had a fairly high melting-point and which were frozen during the process of coalescence. Fig. 3, D shows a typical field of steel killed with aluminum in which there is no coalescence of the inclusions, but a decided coagulation into masses of particles surrounded by steel very free from inclusions. This inclusion has a melting-point much higher than that of the steel and therefore little coalescence of the particles would be expected.

DEOXIDIZERS AND THEIR EFFECT

In industrial steels the three most common deoxidizers are manganese, silicon, and aluminum, the first two being the most important. The manganese silicates have a melting-point lower than that of the surrounding bath over a fairly wide range of composition, and they coalesce readily in the steel. The iron-manganese silicates have an even higher range of composition over which the inclusions are liquid, and the melting-points of the double silicates are in general lower than those of the manganese silicates. The optimum conditions for coalescence of particles in steels treated with silicon and manganese can not be predicted until quantitative data are available on the melting-points in the ternary system SO_2-MnO-FeO. With an addition of aluminum to either killed or rimmed steel it is generally true that the inclusions formed have a higher melting-point than that of the steel, and we thus almost always find very small alumina parti-

cles in steels so treated. It is possible that by the use of double deoxidizers, such as manganese-aluminum alloys, more fusible compounds may be formed, giving a cleaner steel with the same degree of deoxidation as is obtained at present with the deoxidizers used as individual alloys rather than as combinations of alloys.

The inclusions described in this paper were prepared as part of the program on the physical chemistry of steel making under the cooperative agreement between the Carnegie Institute of Technology, the Metallurgical Advisory Board, and the United States Bureau of Mines. The photomicrographs on inclusions formed by deoxidation with zirconium, vanadium, and titanium are from a joint investigation carried on by the Bureau of Mines and the metallurgical department of Carnegie Institute of Technology. The writer wishes to express his appreciation to G. R. Fitterer, junior metallurgist, and to B. M. Larsen, assistant metallurgist, both at the Pittsburgh Experiment Station of the Bureau of Mines; to L. R. Van Wert, assistant professor of metallurgy, Carnegie Institute of Technology; and to students of the Carnegie Institute of Technology who did the experimental work on the three deoxidizers mentioned.

DISCUSSION

Barton R. Shover, *Chairman*:* You have heard a very interesting talk on a subject that is intensely interesting and important to the steel man. The help which the scientific investigation of these points has given us should enable the steel man to make more rapid progress than could possibly be done with the old rule-of-thumb methods. There exists in the United States Patent Office a long-expired patent issued on the subject of puddling, where the puddler made the statement in his application that he could get better steel by putting in an onion about half the size of his fist to every so many hundred pounds of metal in the furnace, and this is only one out of the thousands of similar attempts to make improvements in the industry. Until comparatively recent years, the advance in the art has been based chiefly on the results of previous experience, but the scientific man has been gradually proving his value until now the iron and steel industry would make little progress without his assistance. I hope that to-night we can, in the discussion which will follow, bring together some of

*Consulting Engineer, Pittsburgh.

the science and apply it to actual practice. We would like to hear what you have to say.

C. M. JOHNSON:* Dr. Herty's statement to the effect that he is looking for a method for the determination of oxid of manganese in steel appeals to me. It is an interesting challenge to the chemist. The development of new quantitative methods usually consume an enormous amount of time. We works chemists have exceedingly little time to spare but we still try things between times.

I would like to ask the speaker the percentage of manganese and silicon in the deoxidizer which he mentioned. There was an attempt some years ago to sell the steel melter "S. A. M." which I presume has a similar effect, it being a silicon-manganese-aluminum-iron alloy.

C. H. HERTY, JR.: We are working on the silicon-manganese and other binary alloys. It is a question whether to use two separate deoxidizers. I personally think that when we study the silicon-aluminum alloy, or aluminum-manganese alloy, we shall find a much better deoxidation than either one alone, or the two separately. And probably if you get into your "S. A. M." you will get your best deoxidizer. The serious question is whether you can use "S. A. M." alloys, and meet your specifications.

C. M. JOHNSON: In the old method of determining carbon in steel by dissolving the drillings in a double chlorid of copper and potassium, there frequently remained quite a noticeable amount of oxid on the asbestos felt after the carbon was burned off. The question was what portion of the oxid that was in the steel was thus trapped on the asbestos and what kind of oxids?

C. H. HERTY, JR.: Did you ever analyze that for manganese?

C. M. JOHNSON: I never had time.

W. P. BENTER:† I am not a member of the Society but I have enjoyed being here and I should like to ask if there is any connection

*Director, Research and Metallurgical Departments, Park Works, Crucible Steel Co. of America, Pittsburgh.

†Metallurgist in Charge of Laboratories, Pittsburgh Crucible Steel Co., Midland, Pa.

between the type of inclusions formed as products of deoxidation and the so-called obstruction agents which affect crystallization? Would the fine and well distributed silica inclusions offer greater obstruction to crystallization than other silicates?

C. H. HERTY, JR.: Possibly. I would not want to say that one is any worse than the other, because there are so many things in steel that are abnormal.

E. S. TAYLERSON:* Isn't an abnormal streak often due to a row of inclusions? In most streaky steel the inclusions occur in bands. You seldom find a band without inclusions.

C. H. HERTY, JR.: The question is whether the inclusion is formed by the band or the band is formed by the inclusion. I think there is no question but that 90 per cent. of the streaks you find are associated with inclusions, and you can find plenty of inclusions with no surrounding band structure.

E. S. TAYLERSON: I did not particularly mean abnormal case-hardening of steel, but more banded structural segregation assigned by some to phosphorus, etc.

C. H. HERTY, JR.: Personally I think the two things are tied up together.

C. M. JOHNSON: Did you ever try dissolving steel in phosphoric acid?

C. H. HERTY, JR.: No. I think it would be interesting to try it. The trouble is that when you try scientific work you should not be cramped by finances. As a general procedure when you have a small amount of inclusions, say 0.01 or 0.02 per cent., you have to use reasonably large samples. The iodine method is excellent for wrought-iron. If you try to use it on rimmed steel with 0.01 per cent. inclusions you have to use so much that you haven't any money left. You have to get your method and get one that you can use.

*Engineer of Tests, American Sheet & Tin Plate Co., Pittsburgh.

S. L. GOODALE:* Dr. Herty spoke of coalescence not proceeding below the temperature at which the material solidifies. We know a good many instances in alloys where particles grow at even very moderate temperatures; and it would seem that we might find some kind of growth, perhaps by the individual particles joining together, at such temperature as where the steel is still liquid but the included particles solid. This may be the case with silica inclusions. Perhaps coagulation or agglomeration may be a better term than coalescence.

C. H. HERTY, JR.: When you speak of coalescence in alloys, the things that coalesce are the things that are in solution. These are simply masses; they are not in solid solution. When you have a silicate and you heat it up, all that silicate does is to stay there unless it is high in iron oxid, in which case some of the FeO might go into solid solution, but I can not conceive of two solid particles coalescing in the solid steel.

*Professor of Metallurgy, University of Pittsburgh, Pittsburgh.

DEVELOPMENT OF FOUR-HIGH MILLS*

By F. C. Biggert, Jr.†

Within the last few months, so much has been written of four-high mills that it is rather difficult to present any new material on the subject, and it is accordingly proposed to devote this paper mostly to the rolling practice which has developed in operation.

It seems unnecessary, in a gathering of this nature, to go into details of construction, as most of those present doubtless have a clear conception of the mills, but a brief discussion of some of the reasons for adopting this design, may not be out of place.

The object of the design is to provide an exceedingly inflexible working roll of relatively small diameter. This was, to some extent, accomplished many years ago by Lauth who in his three-high plate mill used large top and bottom rolls, with a small middle roll.

At a later date, four-high mills were installed for armor-plate at Homestead, and still later (1916), the same principle was used in the 206-inch plate-mill of the Lukens Steel Company.

As opposed to Lauth's three-high mill, the four-high mill has the advantage that both working rolls are of small diameter, and consequently the pressure necessary to produce a given reduction, is less in the four-high mill.

Other types of backed-up mills, having this same advantage, have been proposed and used, but of these the only one of importance at present is the six-roll or cluster mill in which each working roll is supported by two backing rolls. Several of these mills have recently been built for cold rolling.

We have adhered to the four-high type for two principal reasons which, we think, are sufficient to recommend it:

1. It is more simple and accessible. This will be clearly seen upon the most casual comparison.
2. Its arrangement removes all limitations as to roll, neck, and bearing dimensions.

Some explanation of the latter statement will be necessary. In the cluster mill the two backing rolls applied to each working roll

*Presented April 3, 1928. Received for publication July 5. 1928.
†President, United Engineering and Foundry Co., Pittsburgh.

must be placed as close together as possible, practically in contact, and in practice must not be more than about twice the diameter of the working roll. If these conditions are not maintained, the working roll is so completely surrounded by the backing rolls that insufficient operating space remains. In the four-high design there is no limiting condition, and any suitable ratio of roll diameters may be used. The fact that two rolls are used in the cluster mill where only one is possible in the four-high type, naturally reduces the size of the backing roll necessary to produce a given stiffness, but this effect is not so great as it may appear. The flexure of a roll varies inversely as the fourth power of its diameter, in consequence of which the single roll of a four-high mill need have only 19 per cent. greater diameter than each of the two rolls of the cluster mill, to give equal stiffness.

But the possibility of unlimited stiffness of the backing roll is not the most important advantage of the four-high type. It is the freedom to use necks and bearings of unlimited sizes that most strongly recommends the design. This, of course, has reference to the use of roller-bearings which are assumed to be used. In order to provide ample safety factor, these bearings assume large dimensions, and since the beginning of our work, we have continually found it advisable to step up in bearing size and capacity, and doubtless, as the possibilities of the mills develop, still further increases will be found necessary. The bearings we have used are doing the work so far required of them, but the probability is that greater demands will be made, and even under present demand we do not yet know whether a sufficient average life will be obtained. In the four-high mill, the bearing sizes are practically unlimited, whereas in the cluster mill, there are quite definite structural limitations. Here again we must allow for the use of two bearings in cluster mills to take the place of one in the four-high type, but the angular forces produced by the cluster arrangement partially nullify this advantage and require that each bearing of the cluster mill shall sustain about 70 per cent. of the load imposed upon the single bearing of the four-high mill under identical working conditions.

The importance of the preceding discussion relating to mill types will be more evident when we consider the advantages of roller-bearings on mills for rolling wide, thin material. It is the development of a mill arrangement in which the dimensions of roller-bearings, having ample load-carrying capacity, determine the roll diameters, as

opposed to an arrangement in which roll sizes determine bearing sizes, which constitutes the real advance in rolling practice.

As previously stated, the use of four-high and other types of backed-up mills is old, but, prior to the application of roller-bearings, the accomplishments of these mills were only slightly better than those of ordinary two-high and three-high mills.

It must be borne in mind that all neck bearings and particularly those on plate and strip mills, operate under conditions very near the seizing point. Wear and heating in such bearings are many times more severe than in machine bearings where ample size and thorough lubrication are possible. It should further be remembered that wear and heating increase rapidly with speed, and that both accuracy of rolling and continuity of operation are intimately related to these factors.

It is doubtless true that by running slowly enough a four-high cold mill with ordinary bearings might be built to roll strips such as are now rolled in roller-bearing mills, but, even with slow operation, the utmost care would be necessary to obtain accuracy of gage, and the tonnage output would be relatively small.

When we consider hot rolling, there appears no possibility of commercial operation on wide material without roller-bearings. We can not slow down, for the material would become too cold; and at high speed, no amount of skill could maintain even an approach to commercial accuracy of product. The roller-bearing is thus the crux of the situation. It operates substantially without heat or wear and is particularly adapted to high speed. The only difficulty is that its dimensions precluded its use in ordinary two-high or three-high mills except under comparatively light rolling loads. This difficulty has been removed by using four-high mills where roll diameters may be selected without regard to any factor except the space requirements of the roller-bearing. It was the perfection of this combination that started the recent and remarkable change from the long-established practice for producing wide, thin metal products.

You may be surprised that no mention has been made of the power economy of roller-bearings, but doubtless you now perceive that however important this is, it is secondary to other considerations. Regardless of power requirements, the operation is not commercially

possible without the roller-bearing. The power saving is really a by-product, although fortunately a very valuable one.

In a cold mill and at the finishing end of a hot mill where the power requirement is greatest, the saving, due to the four-high, roller-bearing mill, is approximately 50 per cent.; that is, equal tonnages of like sizes, rolled from like slabs, require, in a four-high, roller-bearing mill, only about one-half the power required in a two-high mill on ordinary bearings. At the roughing end of a hot mill, where the metal is thick, this ratio probably does not apply, but the saving in power is substantial there, also.

Mills of this type have now been operating for a sufficient time to develop at least the beginning of a mill practice, and it will, perhaps, be of interest to discuss some of these developments. Engineers of this district will be coming more and more into contact with the new mills, and it will be useful to the industry, as a whole, to have them cognizant of some of the fundamental requirements.

First, let it be said that these mills can not be run with a monkey-wrench and a sledge-hammer. They are highly refined machines capable of great accomplishment under proper care, and equally capable of punishing the thoughtless and non-mechanical operator. The crowbar mechanic has no place on the crew of a modern strip mill, and the sooner mill operators realize this the better for them and their companies. One roller-bearing on a large mill may cost as much as $4000, and an improper adjustment or careless assembly may utterly ruin it in one minute. Some of the mills will produce more than a ton of steel a minute, and improperly ground rolls or faulty guide setting may cobble 10 or more tons in as many minutes, to say nothing of lost production. Evidently we have here no plaything for a child.

In rolling thin material, we are dealing in measurements of a few thousandths of an inch, and every part of the equipment must be made and assembled with corresponding accuracy. In rolling 18-gage strip, 0.001 inch is two per cent. of the thickness, and an error of two per cent. is, under some conditions, sufficient to make the difference between failure and success. Failure to comprehend this nicety of adjustment has already caused some grief, and doubtless it will cause more.

Proper distribution of metal at an early stage in the rolling is of the utmost importance. All strips are rolled with a slight fullness in

the center. This is necessary to guide the strip properly in the mill, as a perfectly flat strip, or one thick at the edges, is in unstable equilibrium while rolling and will run to one side or the other of the rolls. It is quite surprising how little this central fullness need be and yet how absolutely essential. A strip 36 inches wide and 16 gage may be successfully rolled if it is 0.002 inch full in the center, but can not be rolled if it is dead flat. This applies to long strips. Short sheets may be rolled dead flat, provided there is enough free roll space to prevent their running into the necks, but the real economy of the mills is realized only on long material. But, if you would have 0.002 inch fullness at 16 gage, you must provide the metal for this fullness while the metal is thick. 0.002 inch is roughly three per cent. of the thickness of 16-gage stock, but to get it and have a flat strip, you must provide three per cent. excess metal at the center when the strip is not less than ½ inch thick. Indeed, it is much better to start at the first pass and continue throughout with an excess of three per cent. at the center. By so doing, the final piece will have reasonably square ends, will not be buckled, and will have a better surface.

To get 0.002 inch fullness in the finished product, does not mean that the rolls are concaved 0.002 inch. On the contrary, they may even be a few thousandths full. There is some spring and some deformation of rolls even in the stiffest mill, and it is a matter of careful judgment and experience to determine the proper contour of roll. Furthermore, the backing rolls wear, and, since they are not changed except at infrequent intervals, the working rolls must be ground to correspond to the worn condition of the backing roll. In this respect, the practice in shaping the rolls, corresponds roughly to plate-mill practice where successive middle rolls are increasingly crowned until the time comes to change the top and bottom rolls. The difference in strip mills is that the requirements are much more exacting. Turned rolls can not be used, and the best grinders and most accurate micrometers are none too good to insure satisfactory results.

Backing rolls do not need changing so frequently as working rolls, but it is easy to be deceived by appearances and thus allow the backing rolls to remain too long in the mill. It may be surprising to some that, even though the backing roll may be several thousandths out of round, the mill may still roll commercially accurate material. This applies to both hot mills and cold mills and is due to the rela-

tively large spring of the mill as compared to the error in roll dimensions. Some very heavy cast-steel housings which we have tested to full calculated rolling pressure, have elongated as much as 0.030 inch, and when we allow for compression of screw, deformation of rolls and so on, the total spring of the mill will probably amount to 0.050 inch. A mill so loaded may be reducing as little as 0.002 inch and frequently about 0.010 inch. Now, an eccentricity of 0.004 inch in the rolls with a mill having 0.050 inch spring and reducing 0.010 inch will vary the rolling pressure from maximum to minimum, and consequently to amount of reduction, by only two per cent., or less than 0.001 inch, which in roughing operations and even for some finished material, is sufficiently accurate.

Of course, the object in discussing the possibility of rolling with inaccurately shaped rolls, is not to recommend the practice. On the contrary, it is to show that the fact that the mill is producing acceptable product is not proof that the rolls are in perfect condition, and to lead up to the importance of a definite routine of roll changing.

When backing rolls are left too long in the mill, concentrated bearings develop to such an extent that serious damage is done to backing rolls, or working rolls, or both. Roll breakage is increased but spalling is usually the first indication of trouble.

In some of the hot mills now working, a practice of changing backing rolls every fourth week has been adopted, but, as outputs increase, it is likely that more frequent changes will be found economical, especially on the last three or four stands. For each mill a proper interval may be determined from practice, and it is preferable to make frequent changes. This is a matter of great importance to successful operations.

Another highly important point is the exact equalization of working-roll diameters. On both hot mills and cold mills, the rolls in each stand should be matched as closely as good micrometer calipers will permit. On a 16-inch roll, the error should not be over 0.002 inch, and roll turners accustomed to ordinary mill practice usually have a new art to learn when this degree of accuracy is required. Accurate matching of rolls gives two important results. It is obvious that with rolls of different diameters in the same mill there must be slippage either between the rolls and the metal or within the metal itself, and neither of these conditions is conducive to good product.

I believe that when the differences in diameter of rolls is around 0.004 or 0.005 inch, as is likely with ordinary spring-caliper measurements, the slippage usually occurs within the metal even in cold rolling, and in hot rolling this condition must obtain even with much greater differences of diameter. This opinion is based on the observation that, where improperly matched rolls are used in hot rolling, there are no markings on the metal which may be attributed to roll slippage. It seems almost certain that, if the roll slipped on the piece, the action would go by jumps. Once started slipping, the roll would run ahead and then slow up until the slipping force had again accumulated. All frictional slippage has this characteristic due to the higher coefficient of stationary friction. In cold rolling, where the metal has a very high resistance to internal slippage, and where oil is used on the rolls, there may be slipping between roll and metal, and it is likely that the faint cross lines on the product, commonly known as "pinion marks," are sometimes due to this cause. In any case, it is certain that in thin rolling, whether hot or cold, all slippage must have a detrimental effect upon the metal and should be reduced to the lowest value practicable.

The other important reason for accurate matching of rolls, relates to the mechanical operation of the mill. The mill pinions are of equal diameter, and, for every revolution they make, the rolls must also make one revolution; but in rolling thin material, particularly old material, the rolls are so strongly pressed against the material that they may be considered as almost equivalent to another pair of gears on the same shafts as the pinions. Now, supposing the rolls to have unequal diameters, it is obvious that strains which may become very great will be set up within the machine.

If there were no slip, and the rolls were different in diameter by one per cent., the torsion in spindles and the pressures on the pinion teeth would theoretically be 10 times those due to the torque applied to the mill. Practically, these stresses could not reach this maximum since either breakage or slipping of rolls would relieve them. The point is that, with unequal rolls, both the torque in spindles, and the tooth pressures, may reach several times the torque applied by the motor. This does not imply that the mill acts as a perpetual-motion device. It is multiplied stress, not power, that is involved. The effect is roughly comparable to that of the wattless current of an electric

system operating under a poor power-factor. This somewhat theoretical discussion is included to show the great importance of well matched rolls, but no theory is necessary to demonstrate the effect of improper matching. The clashing of spindles and wear of pinion teeth, will promptly announce the overloads to which they are subject when improperly matched rolls are used.

The arrangement and adjustment of guides is of importance mainly to insure that the path or bearing of successive pieces be on the same part of the roll, and that the line of entry be perpendicular to the rolls. In other words, the control of the metal, after it enters the mill, is obtained almost entirely independently of the guides. This will be obvious when we consider the very small contact area of the guides compared to the width of the strip. There can be very little guiding effect from the pressure of a guide bearing upon the edge of a strip say 30 inches wide and only 1/16 inch thick. The lateral control of the piece must, therefore, be accomplished almost entirely by careful adjustment and shaping of rolls.

Of course, the shape of a roll in the grinder is not the same as when it is actually rolling steel. When the rolling pressure comes on, there is a flattening of the roll due to elastic compression, and also some flexure, no matter how stiff the backing roll may be. If both backing and working rolls are ground straight, they will deliver a strip somewhat full in the middle, but the amount of fullness will depend upon the amount of reduction, and the width, character, and shape of the entering metal.

Suppose that in a mill with all rolls ground parallel, we enter a strip of annealed steel 30 inches wide, 0.100 inch thick at the edges, and 0.103 inch thick at the middle, and make a reduction of only five per cent. The delivered strip will have almost no fullness at the middle, but will be badly buckled and useless because more reduction has been made at the middle than at the edges. If we now enter a similar strip without any change except bringing the rolls together enough to produce a 10 per cent. reduction, the delivered strip will be much less buckled and will have more fullness at the middle. The added pressure has changed the working shape of the rolls so as to conform more nearly to the shape of the entering piece. If we repeat the operation with, say, 15 per cent. reduction, the strip may come out without buckling, and, having been reduced by exactly the same per-

centage at the edges and the middle. The working shape of the roll has again been changed by simply increasing the load. This action is very important to the mill operator. Without it, he would be compelled to grind his rolls differently for almost every change in width or gage of product; by its use he is enabled to shape his mill to a wide range of requirements by the simple expedient of varying his reductions.

Refer back to our supposed operation, and we find that when suitable adjustment has been made, we are entering material 0.100 inch thick at the edge and 0.103 inch at the middle, and delivering 0.085 inch at the edges and 0.0875 inch at the middle. The rolls which were ground exactly straight, are curved under working conditions, so that they produce exactly 15 per cent. reduction at every point on the full centered strip which we are rolling.

Now suppose that the strip begins to travel across the face of the roll, say toward the right. The reductions at various points across its width immediately change. The right-hand edge coming nearer to the end of the roll, receives an increased reduction, and the left-hand edge moving toward the middle of the roll face, receives a lesser reduction. But it is common knowledge that any flat material between rolls will move toward that end of the roll which is producing the least reduction. Then obviously movement to the right can not continue. The strip will settle into a stable position in the middle of the roll face, and slight variations which must occur in thickness of the entering strip, can cause it to wander only momentarily from its path.

If, instead of grinding our rolls flat and allowing the rolling pressure to curve them, we had ground them with a crown and applied pressure to bring them exactly straight, we could have entered a dead flat strip and delivered one equally flat, but under these conditions, there is practically no tendency for the strip to remain in the middle of the roll face, and once started wandering, it will almost certainly destroy itself by running into the necks. This is the reason for rolling with a small amount of fullness in the middle. It also explains the previous statement that the guides are mainly of importance in entering the strip, and can not be depended upon thereafter.

In cold rolling and, to some extent, in hot rolling, we have still another means of controlling roll shape by the local application of heat. If a mill becomes hollow and has insufficient crown, several

thousandths of an inch may be added to its diameter at the hollow point, by a properly directed gas flame. This is most conveniently accomplished by heating the large backing roll. The heat, of course, gradually distributes itself in both directions from the point of application, and thus develops a very suitable bulging of the roll. To illustrate the possibilities of this method, it may be noted that an average increase in temperature of 50 degrees F. in a roll 40 inches in diameter, will give an expansion of about 0.012 inch, and with suitable burners, it is not difficult to maintain such a temperature difference, although it would be considered extreme.

In shaping rolls by heat, care is necessary to avoid damage to the rolls. The mill should always be in motion before burners are lighted, and the burners should produce a broad flame rather than a narrow concentrated one. A convenient system for heating consists of a series of burners made from pipe with holes drilled so as to produce a series of small flames. The burners may be six or eight inches long, and three or five of them may be arranged along the face of the roll. Individual valves should be provided so that each burner may be adjusted as required. A blast injector may be used, but only sufficient air should be admitted to give a good blue flame.

Some operators have applied heat directly to the working rolls, but we believe this unwise, particularly when hardened steel rolls are used. It is preferable to heat only the top backing roll and to change the mill when the rolls have become so hollow that excessive heat is required to keep the mill in shape. More expansion could be had by heating both backing rolls, but this involves much greater skill in controlling the mill, and is not usually a satisfactory procedure.

These are some of the important points of operation which have so far developed in the operation of the mills, and this long discussion of them may leave the impression that the difficulties involved are practically insurmountable, but actual results have shown that this is not the case.

Both hot and cold mills are running at high production rates, and where the crews are well broken in, no great difficulties are encountered. Once properly adjusted, the mills require comparatively little attention, and the economies possible are sufficient to warrant all the skill and thought necessary to their proper operation.

DISCUSSION

G. E. DIGNAN, *Chairman*:* This very interesting and instructive paper should bring out a very full discussion. The paper is now before you. Mr. Shover, have you anything to say on the subject?

B. R. SHOVER:† I hardly feel qualified to talk about the paper because the experience the speaker has had on this type of mill has been second to none in the country. I can only substantiate—from my own comparatively slight experience with it—every point he has brought out. I have run up against these things and the solution has been as has been given by Mr. Biggert.

He spoke of one thing, the preferable heating of the top backing-up roll. I have wondered why it is preferable to heat the top rather than the bottom one. Would it be wrong to try to heat both?

F. C. BIGGERT, JR.: It is merely a matter of convenience. The top roll is easier to get at, and it is easier to control the water so the water will not offset the effect of the heat.

B. R. SHOVER: That would be on a hot mill.

F. C. BIGGERT, JR.: With a cold mill you have no water but you have the roll up where you can see it and you can feel it, and the bottom roll is pretty hard to get at.

B. R. SHOVER: I should like to ask a question about the necessity of accurately measuring up the working rolls. Has the attempt ever been made to drive this mill by driving only one working roll? Would that obviate the trouble?

F. C. BIGGERT, JR.: It does on certain kinds of work. On other kinds it can not be done. On very thin rolling, I believe that more can be done with a free roll than has yet been accomplished.

B. R. SHOVER: Considerable difficulty has been experienced with taking care of the product of four-high mills when that product is strip, and delivery speed is high; and as far as I know, in any high-

*Chief Engineer, Rust Engineering Co., Pittsburgh.
†Consulting Engineer, Pittsburgh.

delivery speeds it has been found necessary to run the entire strip out on a hot table and subsequently anneal it at a lower speed. I have wondered if there has been any recent development of the art of either coiling these strips at mill-delivery speed or shearing them into lengths somewhat similar to the flying shear in the old sheet-bar and billet-mill work.

F. C. Biggert, Jr.: Shearing has not been attempted at these high speeds, although probably it can be done. Coiling has been done. The Otis mill, which is a two-high mill, for a number of years has been coiling directly off the mill. The coiler is only a short distance from the mill so that the piece is in the mill at the same time that it is being coiled. The delivery speed is 800 to 1000 feet and the material is delivered at about 1500 degrees.

G. E. Stoltz:* In the design of four-high mills using small working rolls, does the small diameter limit the size of the pinions, resulting in overloading the pinions?

F. C. Biggert, Jr.: No, we have not found any trouble in that except where the maximum loading they could use would overload the pinions. Loads on pinions do not become very great if the rolls are well matched. That is probably the limiting feature—the diameter of the roll. You must have it large enough to get a reasonable sized pinion in to transmit the power required by the mill. The matter of small diameter of roll is important only in that it makes the mill less expensive to build. The power consumed is not different and the difference is mainly that the loads on the mill are higher. Due to the higher pressure applied to the larger roll, the bearings and the housings have to be larger, and the whole mill becomes bigger; but the same power input will produce the same reduction. That is not commonly known. It used to be considered that the reverse was true—the larger the rolls the more power input—but it has developed that the extra power input is due to the extra friction on the neck, and where you substitute roller-bearings, where friction is a negligible quantity, it does not change the power.

*Manager, Industrial Engineering Department, Westinghouse Electric & Manufacturing Co., East Pittsburgh, Pa.

W. W. MacFarren:* In reply to Mr. Shover's question about flying shears, I can perhaps give a little information. I recently had an opportunity to go over some studies made for a machine of exactly this type. It was intended to shear strips at speeds ranging from 1000 to 3000 feet a minute, the higher speeds being for the lighter sections. The machine cut them into desired lengths from four to 40 feet at mill speed with an accuracy of approximately ⅛ inch. I spent quite a lot of time on this matter and in my opinion it is entirely feasible. It may sound rather astounding but it is one of those things which are easy when you know how. I think that if you could inspect the drawings that have been prepared along this line most of you would agree that it is simply a matter of commercial skill to produce a machine which could accomplish this result. As I remember, it would be probably practicable to cut 40 or 50 inches in width of a thickness up to ¼ inch and at a speed up to 1000 feet a minute. It would also be practicable to cut 24 inches wide with a sheet of ⅛-inch gage at a speed of 2500 to 3000 feet a minute. That is as much as I am able to state at this time.

F. C. Biggert, Jr.: That would be a very valuable machine for many purposes. The coiling of the strip has advantages but there are requirements where it would be very valuable to be able to shear.

I. W. Frank:† One advantage that Mr. Biggert has not emphasized sufficiently in the design of the four-high mill is that you can maintain the control of the backing roll by the use of the roller-bearing, which at high speeds is impossible with a metal bearing. The swelling of the roll neck, and the transmission of heat from the neck to the body, would be ever-changing conditions, and that is a principle that Mr. Biggert discovered and made use of in the invention of the four-high mill, not simply putting in roller-bearings to reduce power, but primarily putting in roller-bearings to reduce heat so as to permit the control of the contour of the top roll. In fact, the patents are based on that very principle—not on the combination of roller-bearing and four-high mill, but on a roller-bearing in a four-high mill where the heat was controlled in the backing roll, thereby maintaining its contour.

*Mechanical Engineer, Oakmont, Pa.

†Chairman of Executive Committee, United Engineering and Foundry Co., Pittsburgh.

G. E. STOLTZ: Mr. Biggert explained that he endeavored to control the temperature of the backing roll by means of a gas-jet. Why wouldn't it be practicable to control this by electric heaters, rather than gas? You could control the temperature so much more closely by electric heating. I should think such an arrangement would add considerable value to this design of mill.

F. C. BIGGERT, JR.: It would be a very good method of heating. An electric heater could be accurately controlled. Gas has been used because it is readily available.

G. E. STOLTZ: What I had in mind was this. You have explained in a very fine way how you handle the spring of the rolls and still get the thickness of the product within a tolerance of 0.002 inch. A gas flame is a rather crude method of controlling this temperature. We know that in heating steel we have control within a very few degrees by electric heat. It would be much easier to hold the rolls to a given size with electric heat than with a gas flame.

A. T. KATHNER:* Has it come to your attention that in the lighter gages (16 gage and lower) with a cold-rolled wide strip in the coil it may develop a cross break that you never get rid of and it is still there in the final product?

F. C. BIGGERT, JR.: That is a pretty long question to answer fully. No cold coiler is completely successful. There is always something to be desired in them. The cross break is one of the problems. If you get cross breaks they are exceedingly difficult to get rid of without a very heavy reduction. If they occur when the metal is down close to the final size it is very hard to get them out, and no coilers that I have heard of are perfect in that respect. A number of them come pretty close to it, and, with reasonable care, do not make cross breaks frequently.

A. T. KATHNER: Would that question then be answered by a proper solution of the cold-rolled wide-strip idea? Instead of coiling

*Duraloy Co., Pittsburgh.

it would you work it in cut lengths, shearing the sheets to overcome that?

F. C. Biggert, Jr.: That is possible, but it generally involves a considerably increased scrap loss. On short lengths you get an end that you have to trim. It also reduces the output of the mill, and there is more tendency to marked rolls, though that is more applicable to hot rolling.

DEVELOPMENT AND APPLICATION OF TIMKEN TAPERED ROLLER-BEARINGS FOR STEEL-MILL EQUIPMENT*

By F. Waldorf†

I am afraid that the prospects for your further entertainment this morning are not any too promising, for where the paper Mr. Biggert just read contained a wealth of information on the four-high mill, the scope of the present paper is not so wide as to cover all the details he touched upon, and it may therefore fall short of fulfilling your expectations.

In order to roll steel, one must use rolls and a full complement of component parts that go to make up a rolling-mill. He does not necessarily need to use roller-bearings, for the steel can be rolled as well on plain bearings, although at the expense of power, and therefore when one attempts to extol the merits of only a small part of a mill, as, for instance, the roller-bearings, he does not have so large a field in which to work.

In addition to having a limited field, your speaker is further limited in experience to draw upon for information to hold your attention for a prolonged time on the actual operation of roller-bearings in rolling-mills. However, the success that has so far crowned the efforts of the steel-mill industry to adopt antifriction bearings in the process of rolling steel has been both gratifying and encouraging. The benefits derived when considered from the four viewpoints—power saving, maintenance, repairs, and output—have been extremely satisfactory.

Saving in power as measured in dollars and cents is, of course, the benefit that holds the greatest appeal to the producer and we believe that in time such savings will be reflected in lower prices to the consumer. Maintenance costs are at once reduced to such levels as to be considered mere incidentals, and repair bills are naturally reduced to the point of being almost negligible. Output, by virtue of being almost uninterrupted, except for shut-downs for roll changes, shows a satisfactory increase over that with plain bearings, and marked improvement in the quality of some products has been obtained through

*Presented April 3, 1928. Received for publication July 5, 1928.
†District Manager, Steel Mill Division, Timken Roller Bearing Co., Canton, Ohio.

the smoother and more accurate operation of mills with roller-bearings on the roll necks.

Very few, if any, new installations are now being made with plain bearings, and the keen interest manifested by the mill owners, engineers, and operators augurs well for the early arrival of the day when most of the existing stands will be changed over to antifriction bearings.

Within the past year the Timken Roller Bearing Company has investigated the possibility of changing over many types of mills, and it may appear to many of you that more stands should by this time be running on them. Projects of this kind, however, make haste slowly. Neck loads must first be determined and all limiting features of a mill must be investigated before a bearing of proper size and capacity can be decided upon. Then, since the use of roller-bearings in mills is still in its infancy, bearings must often be designed to meet the conditions and it will undoubtedly take several years before any manufacturer of roller-bearings will have a range of sizes that will meet all of the requirements that crop up from time to time.

During the convention held in Pittsburgh last June by the Association of Iron and Steel Electrical Engineers, several papers were read on the application of roller-bearings to mills. Our company took a part in this program and without doubt a number of the gentlemen present heard these papers and the discussion following them. Time will not permit reviewing the paper read, but for the benefit of those who did not attend this convention, a brief reference to it will be made. This, we believe, is justified in order to give some idea of the steps that were taken in our earlier investigations.

There was of course no information available on which design of bearings could be based and considerable pioneering had to be done before the proper design could be effected. This was possible only after several designs were tested to destruction, and assurance thus obtained that our procedure was correct.

The loads encountered while rolling steel, were determined with Brinell plates and hardened steel balls which were placed between the breaker block and the top-roll rider, and the bearings were designed for these loads. When a Brinell test is made, the loads imposed upon the roll necks by the steel in resisting deformation are transmitted to

the screws by the balls between the plates. Each ball leaves a definite impression in the softer of the two plates, and these impressions are later duplicated in a testing-machine. The pressure required to reproduce each impression is recorded, and the total load on each neck is taken to be equivalent to the sum of the pressures required to make the individual duplications in a plate.

Our initial rolling tests were made on the middle roll of the breakdown stand of our 22-inch, three-high bar-mill. Owing to the housing limitations we could not get bearings on any of the rolls except the middle one, and on that only by reducing the neck diameter from 14 to 13½ inches.

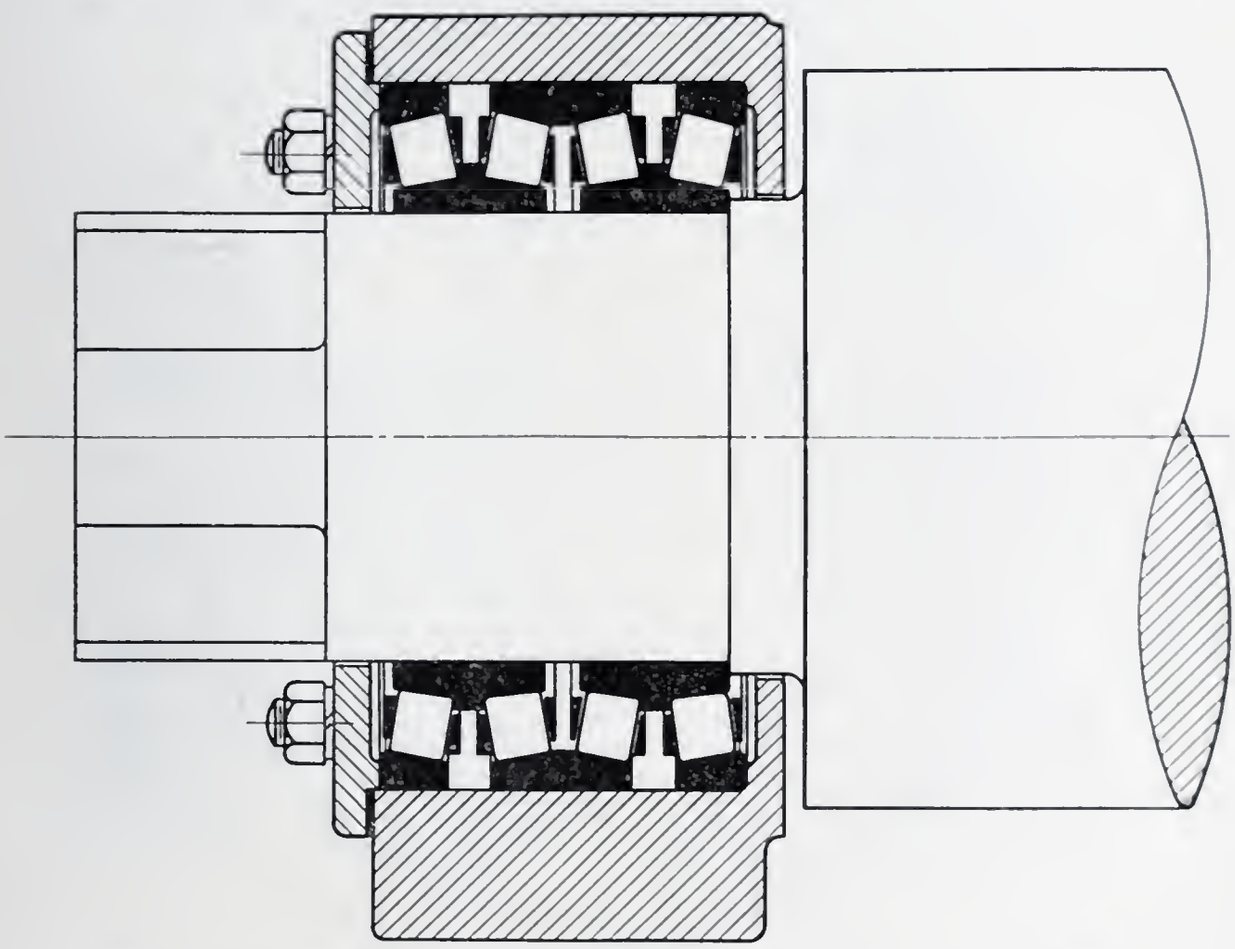

Fig. 1. Four-Row Bearing and Mounting, Tested on 22-Inch Mill.

A four-row bearing as shown in Fig. 1 was built, having a capacity of 400,000 pounds at 60 r.p.m. and dimensions of 13½ by 21 by 11½ inches. After rolling considerable tonnage of eight by nine blooms to four by four billets without having any trouble with this bearing we decided that such a large capacity was not required. We therefore removed from the necks half of the rollers of each bearing,

thereby reducing its capacity to 200,000 pounds, but the same rolling duty had no effect upon it. In order to impose extreme loads on this two-row bearing we decided to roll cooled blooms, and in order to determine what loads actually occurred while rolling them we inserted Brinell plates as before described. Neck loads as high as 658,000 pounds and 416,000 pounds were imposed but the bearings suffered no injury. We then decided to weaken the two-row bearing by removing every third roller and we rolled 6500 tons on the bearings in that condition before failure occurred.

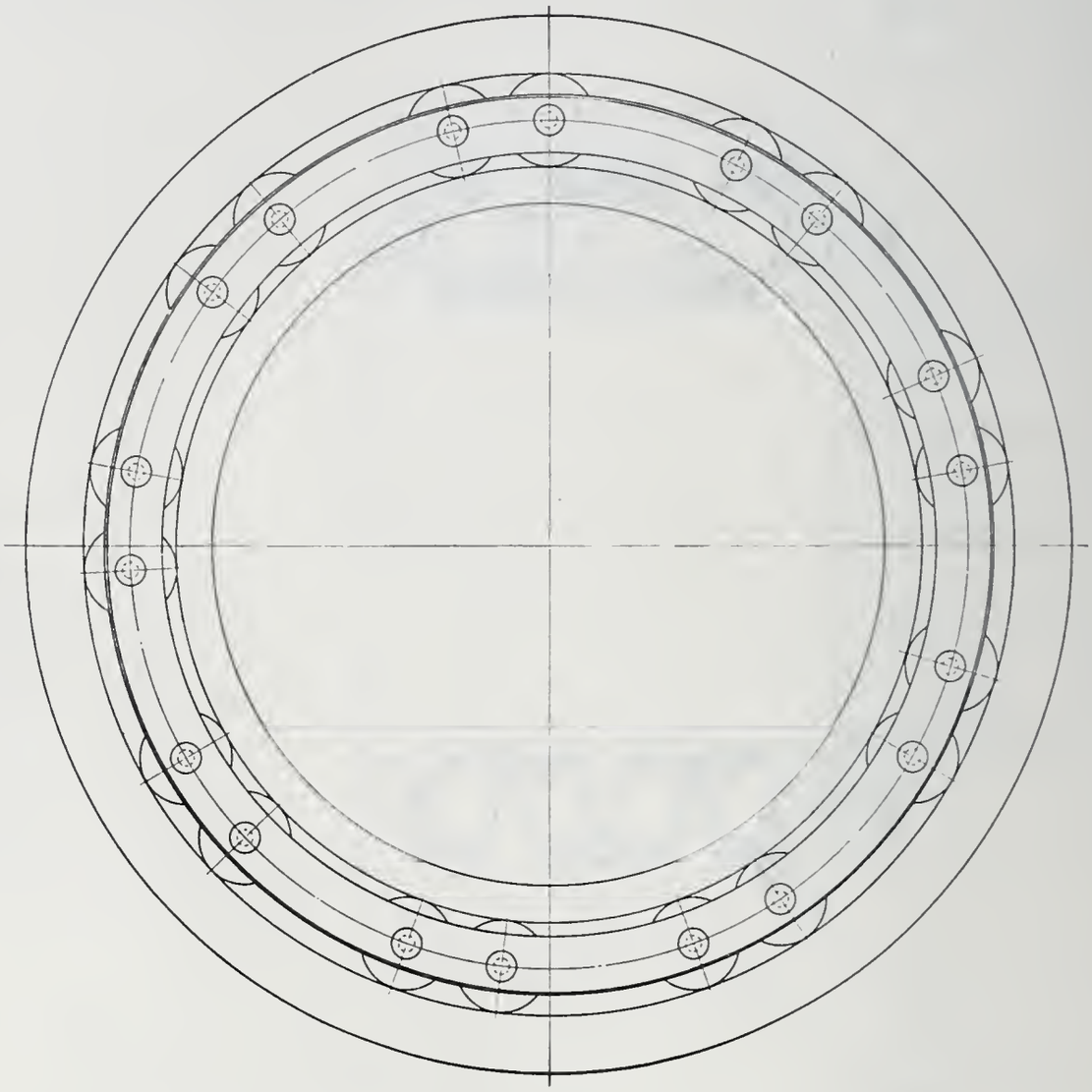

Fig. 2. Bearing with Every Third Roller Removed.

Fig. 2 shows how thoroughly unbalanced the bearing was and you will admit that it stood up very well to last as long as it did. We then replaced the halves of the bearings that had been taken from the original four rows, and rolled steel until the completion of the test. In all, over 40,000 gross tons were rolled during this experiment.

With the experience on the 22-inch mill to guide us we next turned attention to our 16-inch, three-high mill which breaks down three by three billets to sizes that can be taken by our 12- and 10-inch Belgian rod-mills. Brinell tests were again made, and the heaviest neck load found to be 96,000 pounds, the mill speed being 112 r.p.m. Housing limitations again precluded the possibility of using the original neck sizes, and here we reduced them from 10½ to 10 inches but, notwithstanding the fact that we robbed the roll necks to the limit, we could not get in the required capacity and finally used bearings that were rated at 73,000 pounds at mill speed. These bearings are 10 by 14 by 8 inches. The complete mill with the bearings in position is shown in Fig. 3. This mill has now been rolling since March 1926

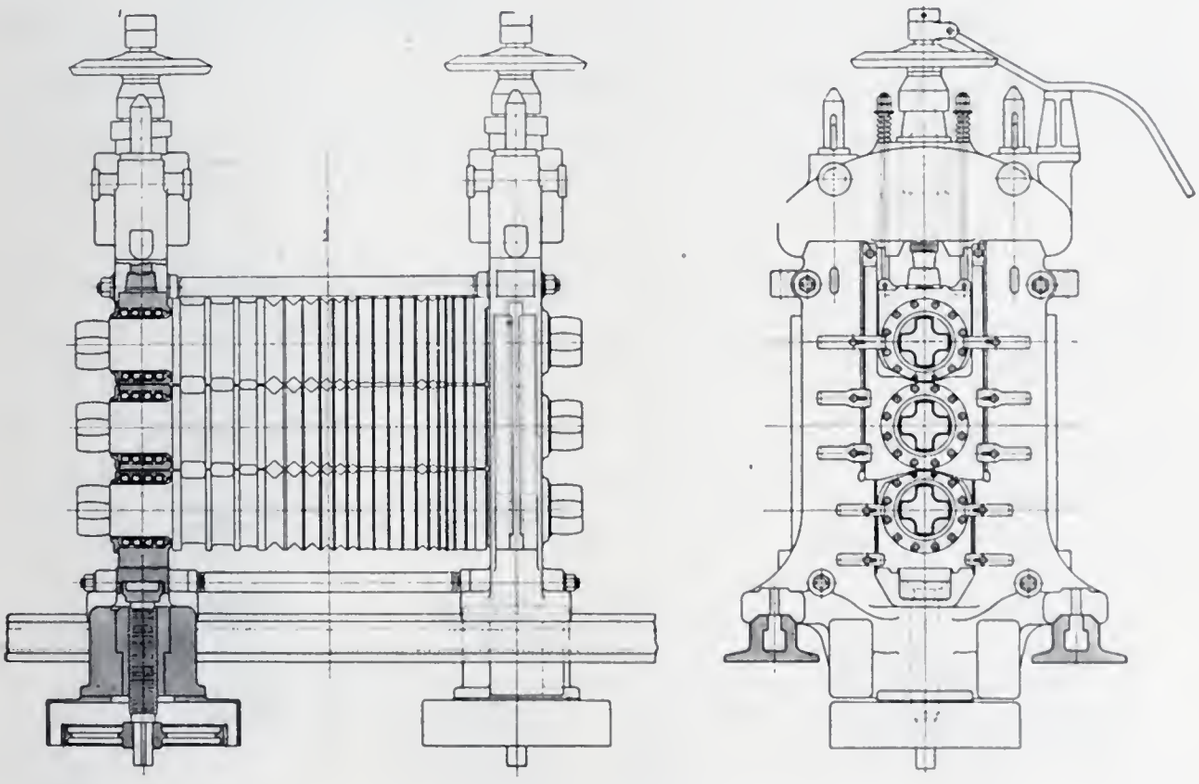

Fig. 3. Three-High 16-Inch Mill.

on bearings of this size, and they have been continually subject to overload. Power readings taken on the 16-inch mill for several months show savings as high as from 34 to 47 per cent. as a regular occurrence, and savings as high as 62 per cent. have been attained. The pinion stand for this mill has also been equipped with the same size of bearings but, as the load on them is only that of tooth pressure, very little saving in power is noted but the maintenance and repair

bills have all but disappeared. These bearings have required no attention for 18 months except for that of lubrication.

In September 1927, we equipped our 22-inch three-high, roughing stand with bearings, and in order to put them on all three rolls we had to reduce the necks to 12 inches in diameter. The bearings used are 12 by 17½ by 9½ inches. They are of the four-row type and have a capacity of 163,000 pounds at 60 r.p.m. This installation has been in service, and has required no attention since that time.

Our 10-inch, two-high, rod-finishing stand was also equipped with Timken bearings about eight months ago, but due to a curtailment in our rolling operations this stand has not seen more than about one month's actual service. We are pleased to report, however, that we are able to roll rods held to a tolerance of 0.0015 to 0.002 on the diameter. The bearings are of the four-row type, 5½ by 8¾ by five inches, and have a capacity of 16,000 pounds at 500 r.p.m. Since placing our mill in operation several other companies have made sim-

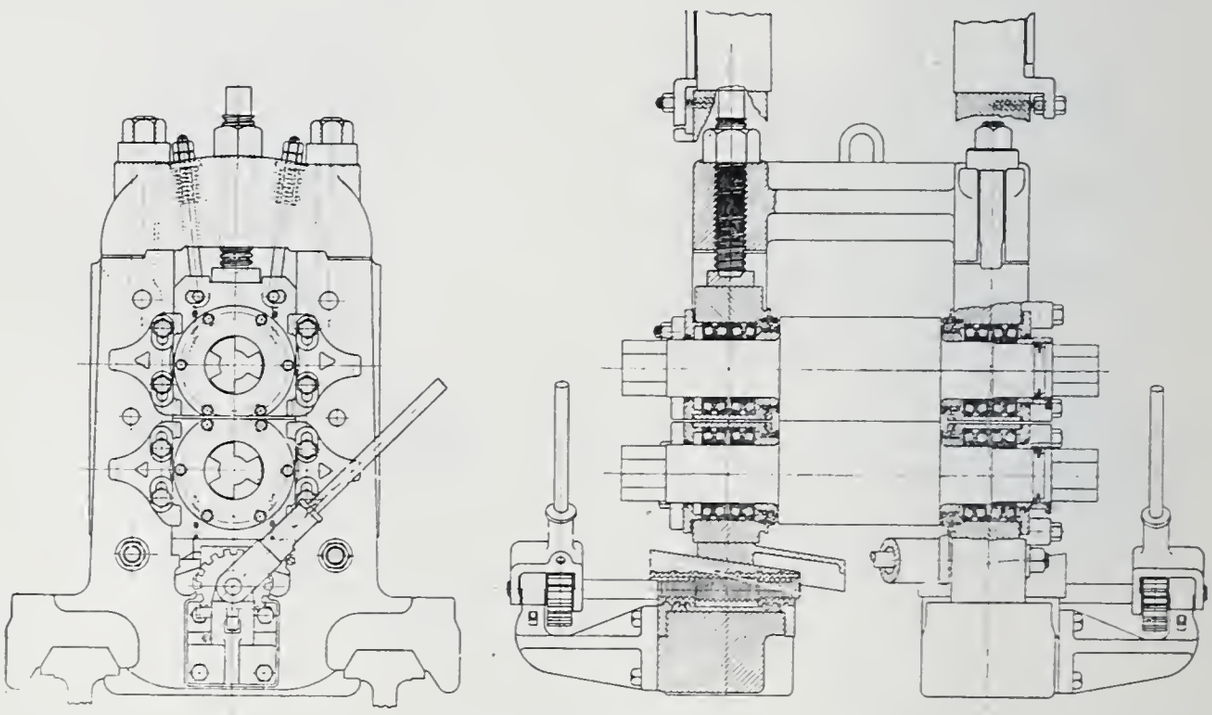

Fig. 4. Two-High Finishing Mill.

ilar installations on two-high mills using the same or similar bearings. The construction of the mounting is shown in Fig. 4. You will note that the bearings on one neck are fixed, while the ones on the opposite neck are permitted to float. This construction was adopted in order to insure a more positive alinement of the passes.

A larger detail of the fixed end of the roll is shown in Fig. 5. You will note that there is a slight change in the way the neck is

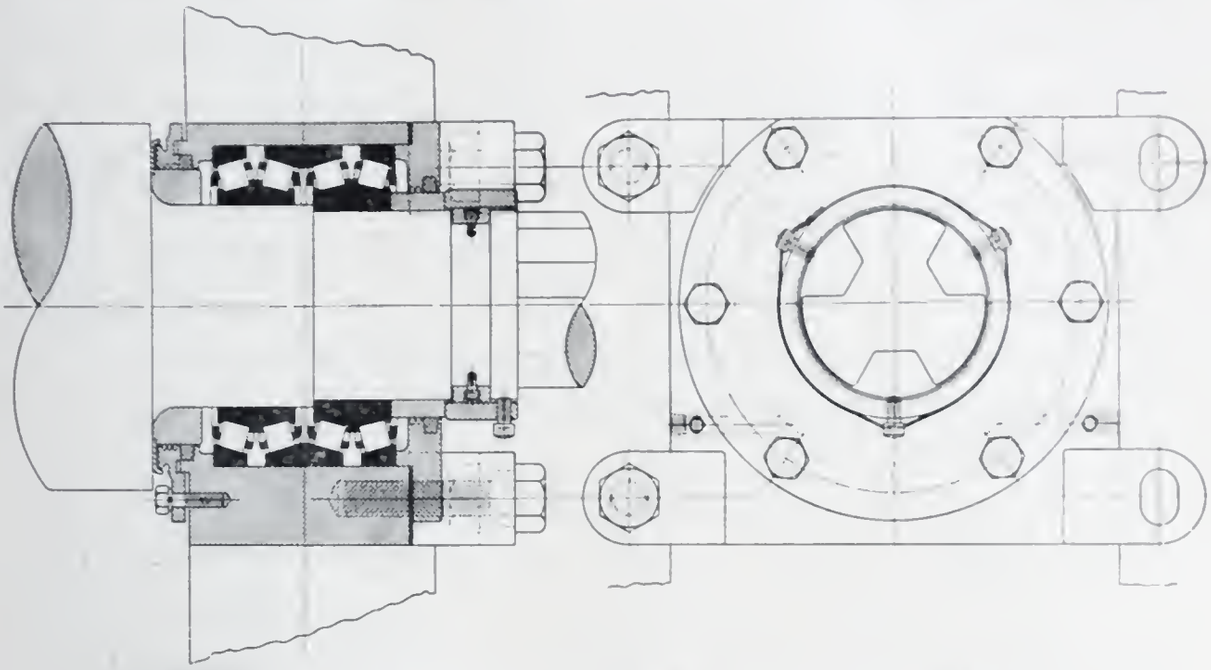

Fig. 5. Fixed End of Roll of Two-High Finishing Mill.

machined. This is done to anchor the bearing on the neck and to permit of adjusting the passes to a nicety, and maintaining this alinement once it is made.

The main roll necks of our 26-inch Mannesmann seamless-tube mill have also been equipped with our bearings. The general application is shown in Fig. 6. The bearings used on the drive end are

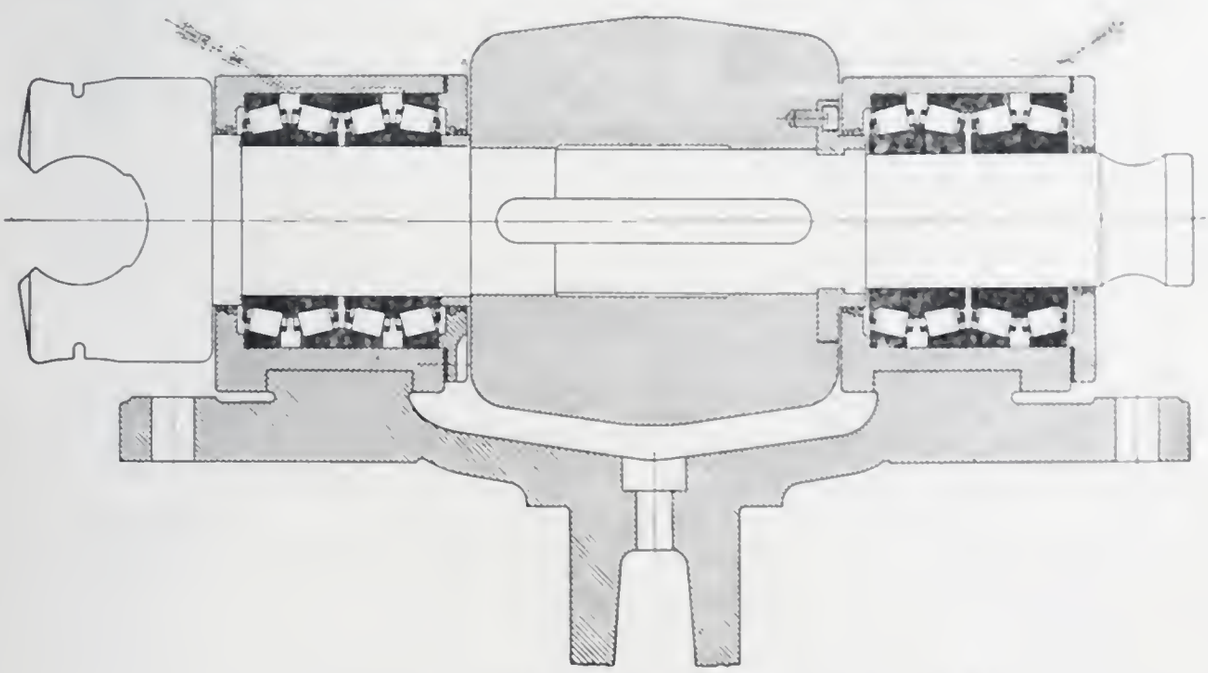

Fig. 6. Bearings on Mannesmann Seamless-Tube Mill.

seven by 12 by 9¼ inches, and those on the free end are 6¼ by 12 by 9¼ inches. The loads on these bearings were obtained by means of a Brinell test while piercing six-inch rounds 75 inches long to tubes with 4½-inch holes and 25/32-inch walls. The steel was 4615 S.A.E. and the blank weighed 600 pounds. The loads encountered were 81,000 and 71,000 pounds, respectively, on the drive and free ends. This mill has been in operation on Timken bearings for approximately six months, in which time it has more than paid for the bearings. This application was practically forced upon us by our operating department because the extremely heavy duty incident to piercing alloy and high-carbon tubes entailed an outlay of about $12,000 a year for upkeep of plain bearings.

We hope in the near future to be able to give the industry some interesting facts concerning power consumption on plain bearings, and the savings effected through the use of roller-bearings. We have been engaged in taking power readings since last November, but, due to the diversified sizes and analyses handled, we have not been able to accumulate enough comparative readings to permit publishing our results.

Before leaving the subject of our personal experience with the application of bearings in our mills, it will interest you to learn that we have already made bearings, and have machined the rolls for a complete change on our 35-inch, three-high blooming-mill. The change is being held up until we shut down our plant to tie up our present mills with the addition of an 18- to eight-inch continuous merchant mill, 28-inch, three-high breakdown, and 22-inch bar-mill which we are installing this year. In this connection, we can advise that the new rolling equipment in its entirety will run on Timken bearings.

At present the following installations are rolling on our bearings:

Four stands of four-high cold-strip mills.

Six stands of four-high cold-strip mills.

Four stands of cluster-type cold-strip mills, and one stand of 18-inch two-high finishing mill.

One stand of cluster-type cold-strip mill.

One stand of four-high hot-strip mill.

Most of the success so far enjoyed with four-high mills can without doubt be laid to the fact that roller-bearings are used on the necks

of the back-up rolls. The belief now also prevails that the use of such bearings on the necks of the working rolls will become general in a short time. Whether their utility in this location lies in their anti-friction quality or in that of keeping the rolls in better alinement is still a matter of dispute, and only time will disclose which quality has the greater merit.

The first requirement of a roller-bearing for the back-up rolls is, of course, that of capacity, the second that of its being almost frictionless.

So far as we know, there is no generally known method for calculating the loads that must be carried by the bearings; but, now that several four-high installations are successfully rolling sheets, this problem has become a simple one in that tests can be made under actual rolling conditions to determine accurately the loads that are being taken, and applying the results to later designs.

We made a pressure test in one of the above four-high cold-mill installations in which are installed four-row bearings 17 by 26½ by 13½ inches. These bearings are designed for 1,000,000 pounds at 10 r.p.m. The test was made while one stand was rolling sheets 37¼ and 38½ inches wide. The former were of 0.10 carbon steel, and the latter were alloy, and both steels were unannealed. The carbon sheets were 0.084 inch thick before and 0.073 inch after rolling, the reduc-

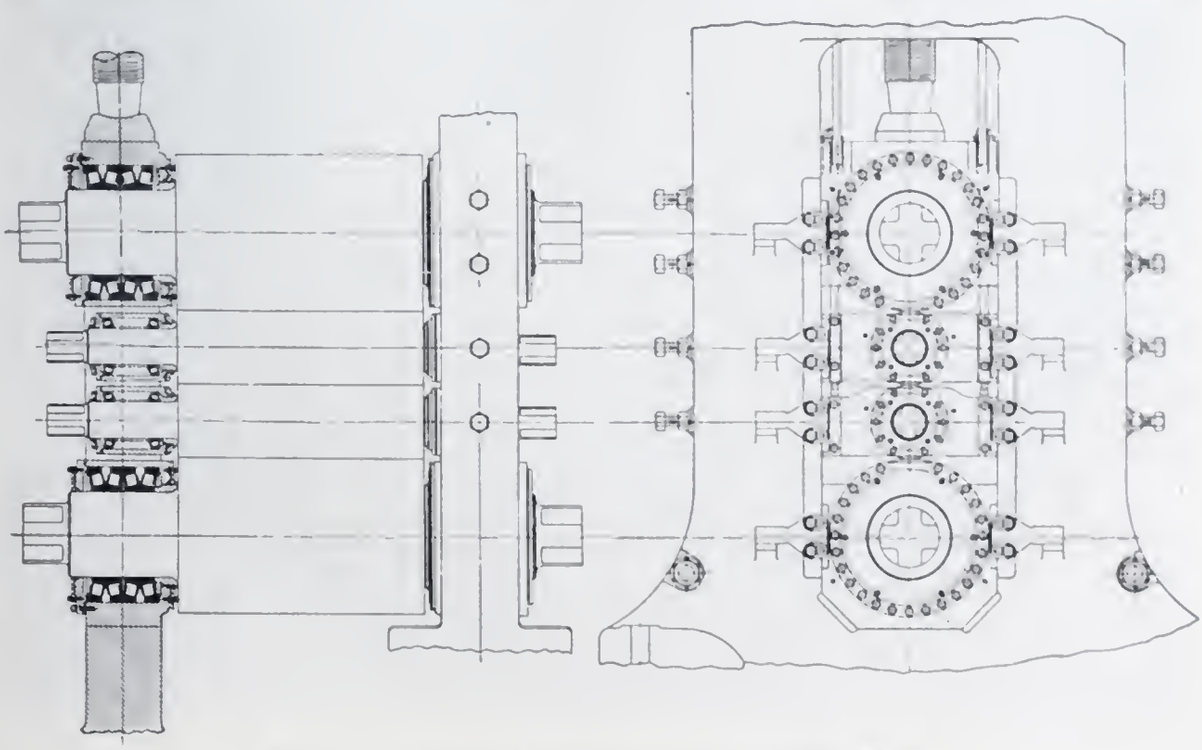

Fig. 7. Typical Design of Four-High Mill.

tion being 13.1 per cent. The neck loads recorded were 750,000 and 724,000 pounds, respectively. The alloy sheets were 0.114 inch thick before and 0.099 inch after rolling, the reduction again being 13.1 per cent, and the neck loads were 803,000 and 757,000 pounds. The mounting of these bearings is shown in Fig. 7. In another installation where bearings 18 by 28¾ by 14¾ inches were used on the back-up rolls, we made the test while rolling sheets 40 inches wide. The reduction made was from 0.075 to 0.054 inch, or 29 per cent. The speed of the back-up rolls was 20 r.p.m., and the loads recorded were 1,200,000 and 1,082,000 pounds, respectively.

Fig. 8 shows the Brinell plate as it was taken out of the mill, and Fig. 9 the same plate after it was calibrated at our plant. An inspec-

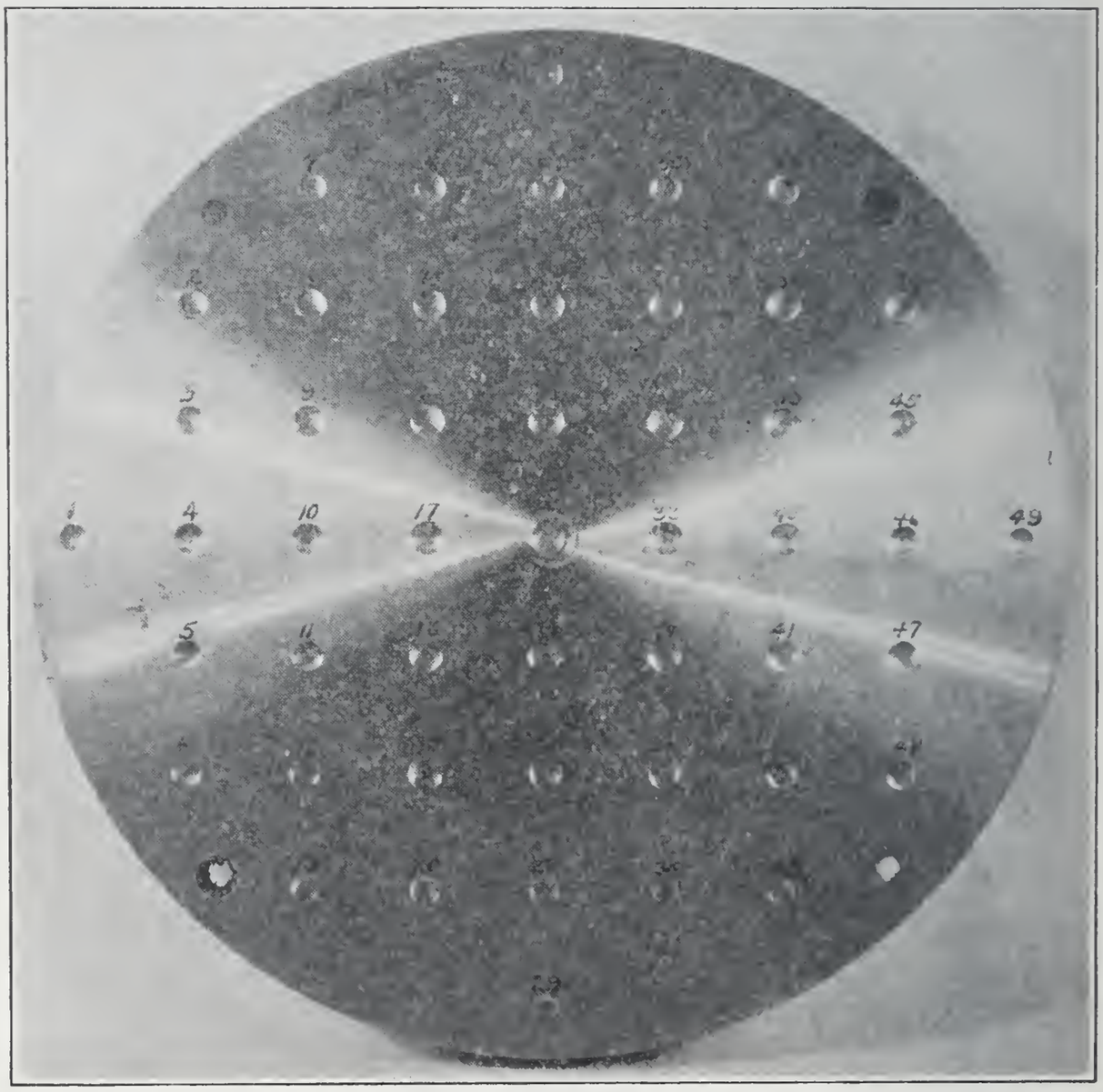

Fig. 8. Impressions Resulting from Brinell Test.

tion of Fig. 9 will show how very accurately we are able to duplicate the impressions the plate receives from the balls when the test is run. Our wide experience has shown that our maximum error can not exceed five to 10 per cent. of the loads actually encountered.

It will also be interesting to state the results of a test we made on a four-high hot-strip mill while strip 5⅞ inches wide and 0.093

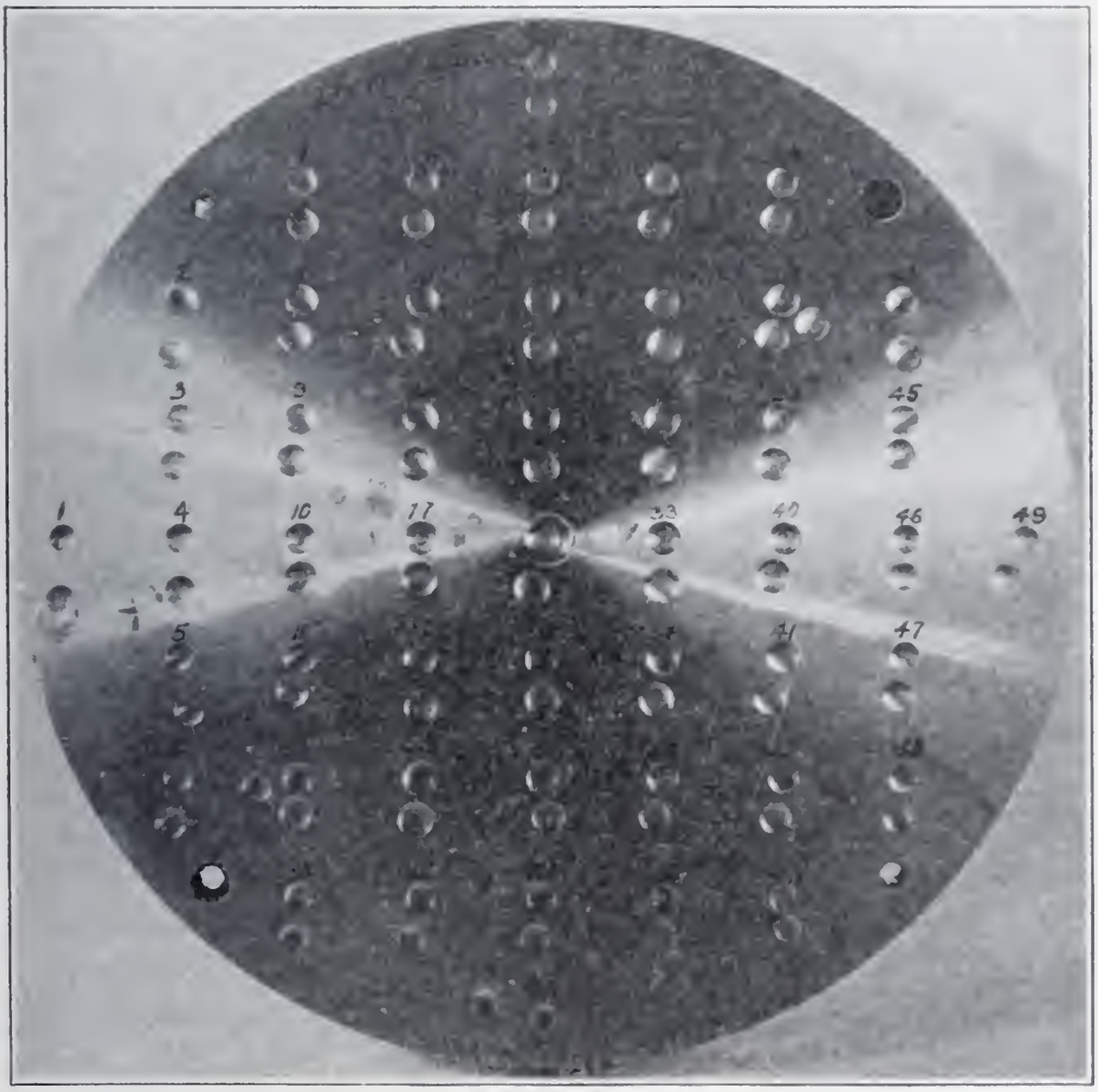

Fig. 9. Duplication of Impressions Shown in Fig. 8.

inch thick was rolled to 6 5/16 inches wide and 0.073 inch thick, the reduction being 16.6 per cent. The steel was of approximately 0.12 carbon, and the neck load while rolling was 130,000 pounds. These are bearings, 10 by 17 by 11¾ inches, and they were going at 275 r.p.m. The capacity of these bearings at that speed is 175,000 pounds.

We are repeatedly asked what life can be expected from the anti-friction bearings on the roll necks. In view of the short experience with bearings in actual operation this question is difficult to answer. We can however say from observations made for a period of over a year that very little wear is shown in that time. We have made it a practice, when installing new bearings in mills, to make a complete record of the bearing fits and the adjustment used when they are set up. This gives us a very close check on the actual amount of wear. In one instance, where the bearings were in operation for over 13 months on the necks of cluster mills, we could not remove a 0.015-inch shim, this being the thinnest used when the first set-up was made. This shows that the wear must have been considerably under this figure, and leads us to believe that the bearings will operate under these conditions for a period of two years before any adjustment will be required. We are fortuante in having access to the above mills at any time, and intend to keep up our periodical inspections in order to get exact data on wear and life of bearings.

The question of the cost of maintenance and possible power savings also arises frequently. We can cite only our own experience in checking such costs on our 16-inch mill. With plain bearings in this mill, our monthly outlay for grease, babbitt, and labor on repairs amounted to $66 a month, and the cost that can be applied against Timken bearings since they have been in operation has amounted to only $2 a month, and that for lubrication. The $66 mentioned above does not include cost of labor for changing the bearings during mill set-ups. As regards the power cost for this mill, our records show that for a period of one year the cost when rolling on plain bearings was $12,000 as against $6400 on Timken bearings. The cost of making this installation was a little more than $3000, which shows that it took about seven months time to pay for the bearings with power savings alone.

Our lubrication engineer has made careful studies of the proper method of lubricating our bearings, and recommends the use of either oil or grease. His specifications for grease are that it should be made of a good grade of cylinder stock oil having a viscosity of not less than 1500 seconds at 100 degrees F. universal Saybolt. Sufficient grease should at all times be supplied to the bearing boxes to insure protec-

tion to the bearings by preventing the infiltration of water and scale. This, of course, requires the use of proper bearing closures on the boxes.

Before leaving the discussion of actual installations, reference should be made to the method used when gear drives and pinion stands are equipped with antifriction bearings. Fig. 10 shows the mounting we recommend for pinion stands in general. The application, as you

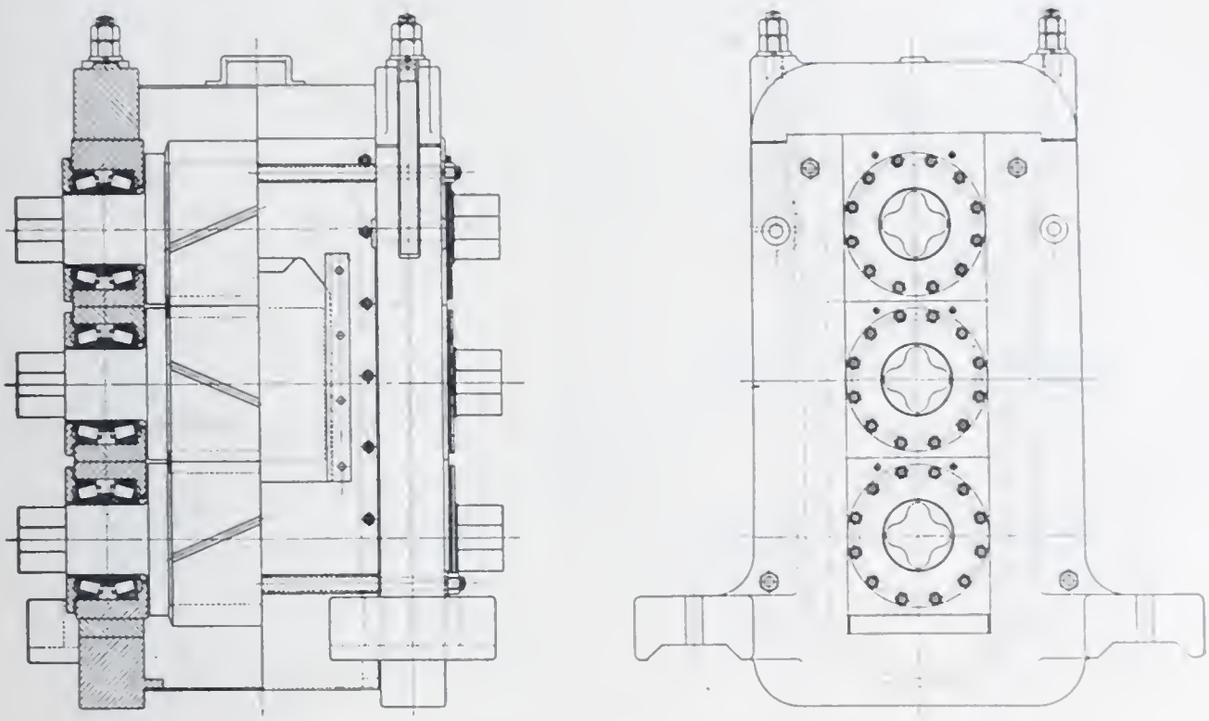

Fig. 10. Typical Design of Pinion Stand.

will notice, consists of only a two-row bearing for each neck, as contrasted with the type used in our 16-inch mill pinions. The use of the two-row bearing permits of a more compact design and should appeal to builders of such equipment. We have found that the loads on the pinions are light as compared with the roll-neck loads, and that a two-row bearing of the same design as is used on the roll neck will answer all requirements and will to a large extent simplify the building, and also the maintenance, of such stands.

Fig. 11-12 illustrate the methods of applying roller-bearings to mill-gear drives. Fig. 11 shows an exact reproduction of the application used in the 1500-horse-power drive for our 22-inch bar-mill. This unit is designed for 200 per cent. overload, and uses 12-inch and 17-inch bearings on the pinion and gear shafts, respectively.

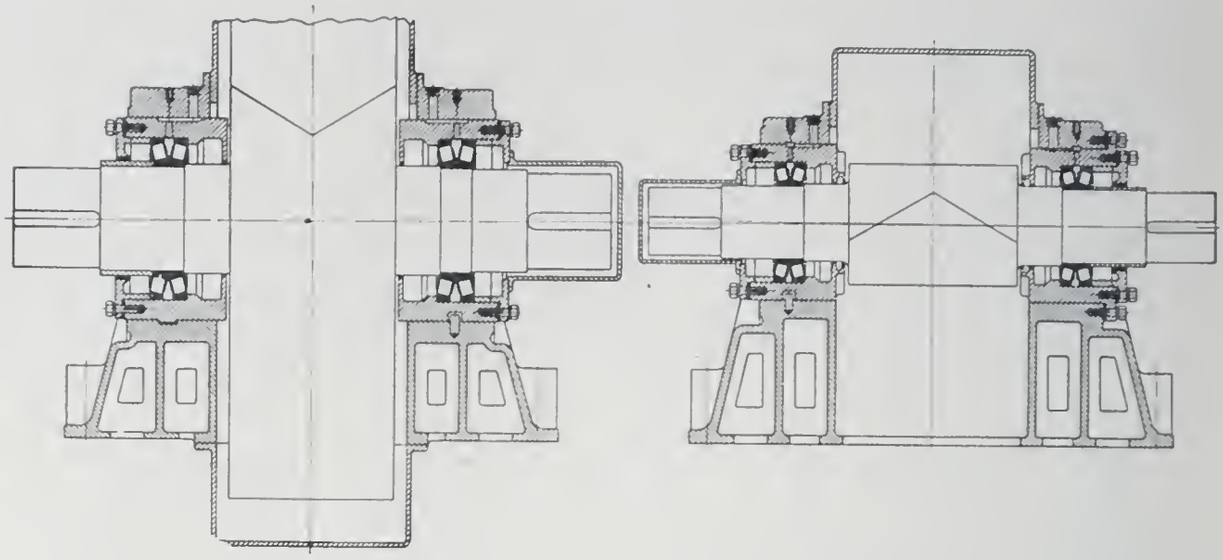

Fig. 11. Typical Gear-Reduction Unit.

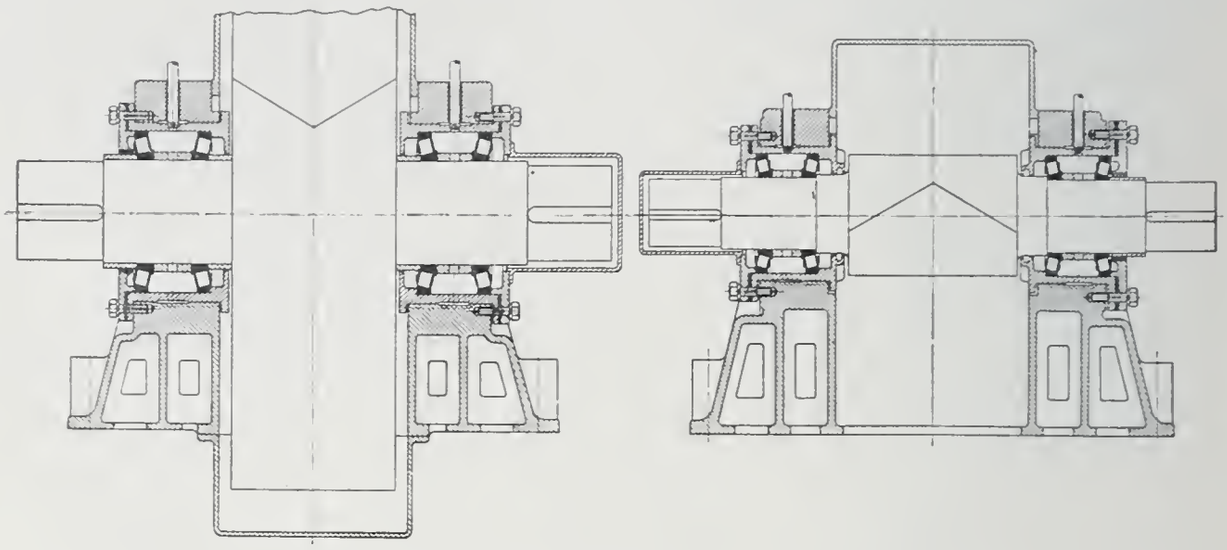

Fig. 12. Typical Gear-Reduction Unit.

In order to simplify the problems of the design for all manufacturers of these units, and to insure properly designed units for all installations, we have adopted the policy of figuring all mill-gear drives for an overload capacity of 200 per cent. This factor of safety, combined with the inherent factor of safety in the bearings themselves will amply take care of the overloads encountered from possible spindle breakages, and the indeterminate unbalanced loads due to the fly-wheel effects on the pinions where fly-wheels are used.

In conclusion, it may be stated that, with the exception of the work done at our own plant, most of the applications have been made on new mills. In existing cold mills, we have found that neck diameters are very large, and it is impossible to incorporate antifriction

bearings unless a corresponding increase is made in the diameter of the body of the rolls. In existing hot mills, we have to consider the problems of high temperatures, and the impact due to the jump of the top rolls. On new mills this problem can be effectively worked out, and we are prepared to co-operate with any mill builder who has such problems under consideration.

On guide mills, the application of bearings can generally be accomplished without much difficulty in two-high mills, but in three-high mills, space limitations are against us unless roll centers are increased or neck diameters are reduced, to permit of working in middle chocks with sufficient metal on the outside of the bearings to take the loads coming down on them. It is also a difficult task to convince the mill operator that roll necks can be reduced when roller-bearings are used, but now that we have a number of mills operating on reduced necks, we believe that experience will eventually demonstrate that a smaller neck can be safely used with roller-bearings than is considered practical to-day with the old style of plain bearing.

Up to the time of writing this paper, the following roller-bearing installations have been made by our company outside of its own plant:

Three 52-inch universal beam mills.
Four four-high cold-strip mills.
One two-high 18-inch cold-strip mill.
Four cold-strip cluster mills with pinion and gear drive.
One four-high cold-strip mill.
One cold-strip cluster mill.
Six four-high cold-strip mills.
Two edging mills.
One edging mill.
Three edging mills.
Expanding-mill thrust block.
One four-high hot-strip mill.
Two four-high hot-strip mills.
One 30-inch lap-weld pipe mill.
Two 20-inch copper rod-rolling mills with pinion stands.
Nine 12-inch copper rod-rolling mills with pinion stands.
One 13-inch three-high rod-mill pinion stand.
Two 10-inch two-high bar-mill finishing stands.

DISCUSSION

F. C. Biggert, Jr.:* It was an excellent paper and I was very much interested in it. I do not think of anything to add to it and there is certainly nothing that I want to subtract from it. It gives a very clear conception of how bearings are assembled and the work the Timken people are doing in determining the working loads is very valuable. Very little has been known in this regard and this knowledge is absolutely essential in the design of roller-bearings for mills. We were up against the same proposition in designing our roller-bearing mills. We did not know what the loads were.

Although we adopted a little different method of determining loads, I have just checked Mr. Waldorf's figures and they agree very closely with what we have. Instead of the Brinell plate that he used, we made a very short cylinder out of strong steel, and a plunger with leather packing. We filled the cylinder with oil, connected a pressure-gage and applied the device under the screw. We got very consistent readings. We had a little trouble until we found out what was the right kind of oil. The thicker the oil the better. We also used molasses and that worked very well. It would not soak through the leather quite as quickly as the oil. But with that device we were able to run the mills for hours at a time on actual production and read each strip as it went through the mill and get the pressure under each screw. Our results, as I say, check very closely with the results given in this paper. We carried the tests far enough to satisfy ourselves that we were on the safe side, but we did not go as far as the Timken people are going. Their investigation is accumulating information which will certainly be very valuable.

B. R. Shover:† I would like to ask Mr. Waldorf about the application of his type of bearing to large gear-reduction units used for driving roll-trains. The majority of these gears have teeth of the so-called herring-bone type, and since it is difficult to assemble large gears so that the apexes of the teeth are in one plane at right angles to the axis of the shaft, either the gear or the pinion must float endwise in order to avoid undue strains and prevent excessive wear of the teeth at one or more points in the circumference of the gear. Mr.

*President, United Engineering & Foundry Co., Pittsburgh.
†Consulting Engineer, Pittsburgh.

Waldorf described a method of providing a slot in one of the roller-bearings on a roll neck so that this bearing could move endwise to compensate for expansion, but such a device would hardly take care of the float in a gear reduction.

Mr. Waldorf has described the use of the Brinell method of ascertaining neck-pressures during rolling, while Mr. Biggert spoke of obtaining similar information by means of a hydraulic cylinder located between the housing screw and the roll bearing. The Brinell method gives the maximum pressure, but the hydraulic cylinder should show whether the pressure varied or remained constant during the time the piece was in the rolls.

F. Waldorf: In answer to Mr. Shover's first question, I will ask Mr. Weckstein, our industrial equipment engineer, to reply, as he is in closer touch with the mill-auxiliary end of our business than I am, whereas my time is usually devoted to roll-neck applications alone.

S. M. Weckstein:* We have had quite a problem with regard to the application of Timken bearings on large mill-gear drives using double helical gears. There seems to be a difference of opinion between manufacturers of double helical gears as to whether these gears can be built accurately enough to permit of mounting them rigidly, or whether the gears must be mounted so that they may float and compensate for their inaccuracies. In our own plant we have a 1500-horse-power gear unit, driving our 22-inch mill, which is equipped with Timken bearings. In this unit the bearings are mounted in cartridges, one cartridge being positively located in one housing, thus fixing the position of the pinion, while the cartridge on the opposite end is permitted to float and thus take care of possible expansion and inaccuracies in machining. The gear shaft is mounted in the same way. There are two prominent manufacturers who are building all their large gear drives on this principle of design. Both pinion and gear are positively fixed. In fact, one of these manufacturers states that it is not feasible to use fly-wheels on units which have floating pinions because the gear teeth will in a short time be completely worn out.

On the other hand, we have been working with manufacturers who insist that one of the gears must float, and we naturally have

*Industrial Equipment Engineer, Timken Roller Bearing Co., Canton, Ohio.

in service some units constructed this way. In these units the gear shaft is fixed by fixing one of the bearing cartridges in the housing. The opposite cartridge floats to take care of expansion and machining inaccuracies. The pinion shaft, however, is so mounted as to permit both cartridges to float. We have found that this works out quite satisfactorily and that the gears tend to work themselves in and properly locate the floating boxes. In designing the floating cartridges an attempt is made to provide for lubricated surfaces on which the cartridges may float.

We have in service two or three units of each type of design, in sizes of 300 horse-power to 1500 horse-power, and they are giving satisfaction.

It is interesting to note that this problem of fixing or floating the gears is encountered not only when Timken bearings are used, but exists also with plain bearings. We know of a number of large double helical gear drives, the plain bearings of which are so designed as to fix the gears positively and not permit any floating; so, on the basis of these records and the experience we have had to date with our own bearings, it is safe to say that either design will work satisfactorily and that it is a matter of accuracy in gear cutting.

F. C. Biggert, Jr.: Mr. Shover asked me if our tests showed any variation in the pressures; for example, whether at the beginning of the rolling there was a bump as the material entered the rolls. There is enough lag in the oil to prevent our device from showing it, if there is such a bump. The piece usually had a long tapered end and there is not much chance for the mill to jump, so I do not think there is much of a bump on entering. After the piece enters, the pressure is constant during its rolling. The gage dances a little at the beginning and then steadies down. In some cases we noticed a tendency to rise slightly at the end of the pass. It may have been that the metal was slightly thicker at the last end.

B. R. Shover: Roll-neck friction is almost eliminated by the use of roller-bearings, and consequently in a roll-train consisting of two or more stands of rolls connected by the ordinary spindles and coupling-boxes, backlash will result. Will Mr. Waldorf please tell us how serious this trouble is, and how it can be remedied?

F. WALDORF: When we first started our 16-inch mill on Timken bearings the backlash was not noticeable. Everything was quiet until we put the first bar through the mill. As soon as the bar left the mill the coupling-boxes began to rattle so badly that one could not hear himself talk while near the mill. We replaced the coupling-boxes with new ones which were planed out to give about 3/16 inch clearance between the pods on the wabblers and the flutes in the boxes, and after this the mill ran quietly for awhile. I know of one mill where this clearance has been made as low as 1/32 inch.

We are now running our own mill with drags on the ends of the rolls, and, were we to use universal couplings, I am sure we would have a very quiet mill. We always recommend the use of universal couplings on mills with our bearings on the rolls and pinions.

S. M. WECKSTEIN: With our 16-inch mill we have found it necessary to put on a brake in order to keep out the backlash which was encountered when Timken bearings were installed. On the roughing stand of our 22-inch mill, however, we have not found it necessary to use a brake, since no backlash has developed. This is undoubtedly due to the fact that we have four stands in line and there is sufficient drag from the other stands to eliminate the backlash. It is believed that backlash will be evident only in the case of individual stands.

F. WALDORF: The drag is a later addition. I do not believe it has been in use for more than five or six months.

C. G. BIGELOW:* This has been a very interesting paper to me. What these gentlemen have told me is, to some extent, new, although I have heard and read of some of the experiments before. I am going back home with the thought that we should get busy right away with an investigation of the desirability of these bearings in connection with our own problems.

W. B. SKINKLE:† I might tell of an experience I have had with these bearings. In one of our plants we were having so much trouble with a 750-horse-power motor that a request for $12,000 had been

*Research Engineer, Inland Steel Co., Indiana Harbor, Ind.
†Engineer, National Tube Co., Pittsburgh.

sent in for a new motor of 1000 horse-power. The possibility of roller-bearings suggested itself and an investigation was made.

The motor seemed to work all right one week and, without any apparent reason, be all wrong the next week. No variation in temperature of steel or chemical analysis of steel could be found and we were up against one of those mysterious cases which so often "just happen" around steel-works. The cycle of load on the motor was very regular—five seconds on full load and 30 seconds on friction load. The motor had a continuous rating of 400 horse-power and 750 horse-power for the five-second period of the load. The trouble seemed to be all in commutation. The idle period of 30 seconds with only a light friction load seemed to be enough to allow the motor to cool.

On testing with everything normal we found a bearing pressure during the five-second load period of approximately 400 pounds per square inch of projected area, and during the idle period this pressure was so low it could not be recorded accurately on the large-capacity recording device. The electrical instrument indicated a total friction loss of 60 horse-power during the idle periods of 30 seconds.

We then learned from mill men that it sometimes happened that the rolls were screwed together very tightly in order to compensate for wear in the pass, and we asked them to duplicate that condition.

Readings showed an idle load of 440 pounds per square inch—40 pounds greater than the working load with the normal set up—and nearly 900 pounds per square inch for the working load on the bearings. The "friction" horse-power was over 400, and the ammeter readings for successive pieces were 2500, 3000, 4500, 5000, etc. It was during these continually increasing readings of the ammeter that commutator troubles were experienced. These readings reached a maximum at 7000 amperes, where they remained constant. This increase in power consumption is caused by the heavy working pressure wiping out the grease film on the roll necks without sufficient relief of pressure between working periods to re-establish the film. When we got to the condition of dry metal on dry metal in the bearings we reached the maximum readings and the electrical gang began having their "fun."

The substitution of roller-bearings for the plain brass neck bearings eliminated the trouble and the experiment promises to be such a success that it has started vigorous investigation of other possible

applications of antifriction bearings throughout the entire works. In this case the bearings installed cost us about $2000. They saved an expenditure of $12,000 for a new motor and it looks as if the saving in power at 0.9 cent per kilowatt-hour would pay us about 60 per cent. a year on the $2000 investment.

The application of roller-bearings or ball-bearings to heavy-duty steel-mill service is not solved by any means. There are a number of troubles which may be encountered on almost every application. Most of these troubles can be overcome if a little care and thought be used. The rewards to the user of roller-bearings are so much greater than the rewards resulting from the manufacture or sale of these bearings that I can not help but feel that if the user does not give the manufacturer every aid possible in the application of this product he is simply cutting off his own nose to spite his face and in the end the user of the product will be the loser.

W. W. MacFarren:* The point mentioned by Mr. Waldorf relating to the application of roller-bearings to pinion housings I think should be stressed. Most people probably think of roller-bearings as antifriction devices simply. I know a good many people do. That is, of course, their prime function, but I have always thought that there are two other characteristics that in many designs are of greater importance than the saving of power. This applies to all types of roller-bearings, not Timken alone. One of these characteristics is the saving of space or the more convenient arrangement of parts, and the other is the lessening of bending moments in the shafts by getting closer centers than would be possible with plain bearings. I remember some machines taking five horse-power from a shaft with two overhung gears; the bearing centers were only 3½ inches and the overhang was greater than that at either end, and we never had any trouble with that transmission, although it required limiting conditions to make anybody use it.

The other feature about roller-bearings which was brought out by Mr. Waldorf is that while there was not any great saving in power when the bearings were applied to pinions the maintenance practically stopped. In other words, a good roller-bearing properly installed, on a gear drive, is to my mind ideal because the shaft centers are put

*Consulting Mechanical Engineer, Oakmont, Pa.

where they should be, and they stay there. I have never been quite able to understand why roller-bearings are not more extensively used on pinions. Of course, the whole application of such bearings to mills is new and probably they have not gone along far enough yet, but, in spite of the fact that there is not very much saving in power, there ought to be considerable saving in maintenance, not only in the bearings themselves—that is, in the direct substitution of rollers for plain bearings which wear—but also in the accuracy of location of the gears and the consequent lessening of wear of the teeth. In other words, a good gear is an expensive machine element, and it should last appreciably longer if mounted on bearings which permanently locate the pitch-lines.

G. E. Stoltz:* Mr. Waldorf brought up the question of wabblers. I do not understand just why he ran into trouble.

F. Waldorf: The wabblers are likely to wear unevenly at the ends. This wear may be so severe as to wear the ends at an angle, producing a wedging action which sets up a tremendous thrust on the pinions and rolls. There is every reason for keeping the coupling-box fits right. Where you have a lot of play between the box and the wabbler, especially in a reversing mill, you batter the box and in time it must wear out.

G. E. Stoltz: On a reversing mill, every time you reverse, you obtain a slap due to backlash. On the continuously running mill this backlash is taken up and held throughout the pass. I do not understand why the noise does not occur during the pass with ordinary bearings but is present with roller-bearings.

F. Waldorf: You have no friction in a mill where roller-bearings are used. In plain-bearing mills the roll weight is sufficient to produce friction on the necks which in a sense takes up the backlash. With roller-bearings the roll is free to jump the instant the bar leaves the pass and thus permit the backlash to come into play.

*Manager, Industrial Engineering Department, Westinghouse Electric & Manufacturing Co., East Pittsburgh, Pa.

CONSTRUCTION AND OPERATION OF KATHNER NORMALIZING FURNACES*

By C. P. Mills†

The Kathner normalizing furnace is the result of many years' work on the part of Mr. A. T. Kathner. He endeavored to develop a furnace that would produce a sheet having deep drawing qualities, better than any other on the market, at a cost below the general practice of the day. He early realized that a great deal of the heat was being lost by the water cooling of the shafts, and attempted to overcome this difficulty by means of an insulated disk. In this he was very successful. He then investigated the heat losses from the average normalizing furnace and, realizing that a considerable loss took place throughout, developed a system whereby the bottom, side walls and roof were completely insulated. This immediately produced a sheet of better quality.

Mr. Kathner, on becoming associated with the Weirton Steel Company, had the opportunity to design a 100-foot furnace, incorporating all of his ideas. This was built, and verified all of his claims. His experience with normalizing furnaces early indicated the desirability of a furnace that would not need to be shut down over weekends for repairs, and this led him to develop a type of sectional construction which he incorporated in the Weirton furnace. Here he was able to observe the results over a period of a year and eliminate minor difficulties. He also had an opportunity to experiment with various materials, with the result of standardizing certain equipment.

On the termination of his connection with the Weirton Steel Company Mr. Kathner became connected with the Duraloy Company, and on November 19, 1927, the Duraloy Company, in connection with the Rust Engineering Company, entered into a contract with the Newton Steel Company to build two 155-foot furnaces, one of which they agreed to have operating on January 15, 1928. This was made possible only by the experience and personnel of the Rust Engineering Company and the facilities at their command, combined with the ability and facilities of the Duraloy Company to produce,

*Presented April 3, 1928. Received for publication September 5, 1928.
†Chief Engineer, Duraloy Co., Pittsburgh.

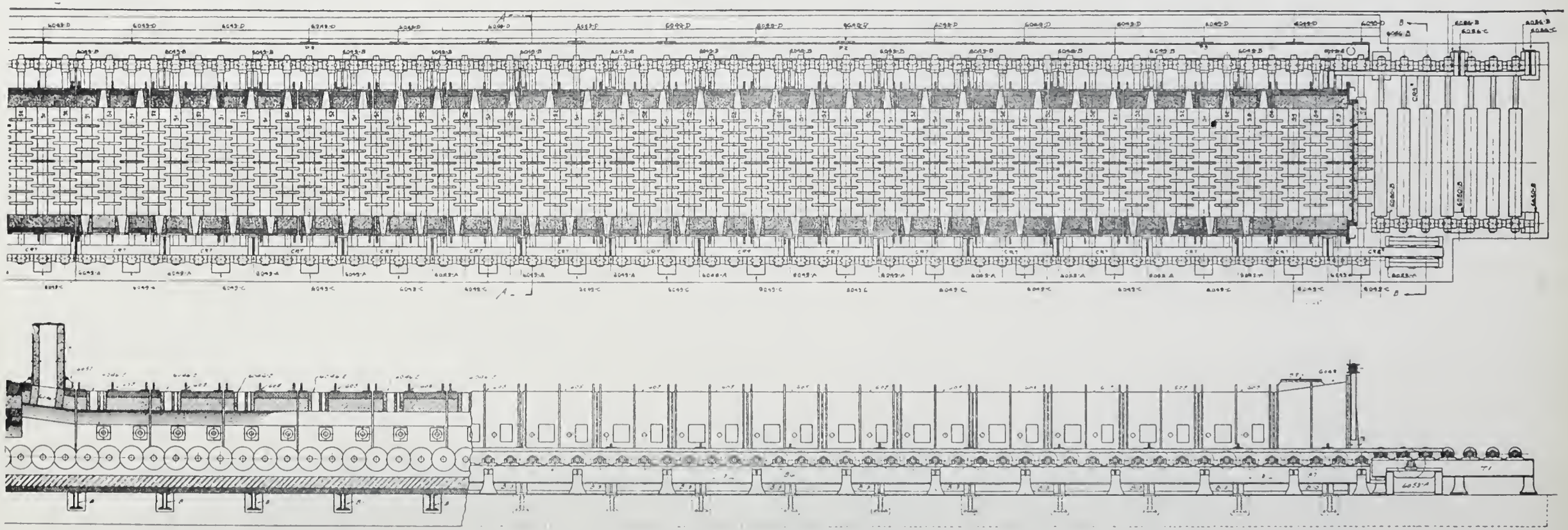

Fig. 1. Plan of Heating Zone.

machine, polish, and assemble over 65,000 pounds of "Duraloy" parts. On January 12 the first furnace was lighted, and on January 17 the fire was started in the second furnace.

These furnaces are divided into two main sections—the heating zone, 75 feet long, shown in Fig. 1, and the cooling zone, 80 feet long, about which we will speak later. The heating zone consists primarily of two parts—a preheating zone and a soaking zone. The first 35 feet of the furnace might be called the preheating zone. In this section there are no burners in the first 15 feet, while the rest of this part of the furnace and what we call the soaking zone have burners the full length. By use of this preheating zone, the loss of heat out of the end of the furnace is reduced to a minimum. The front part receives its heat by the back flow of gases from the rest of the furnace. The heating zone is equipped with both oil and gas burners. The heating zone consists of a bottom section and a removable top. The bottom section is divided into sections of predetermined length to provide for expansion. In this manner the total expansion of the furnaces is not cumulative and there is no creeping of the side walls which would cause binding on the shafts and would be very disastrous.

Fig. 2 is a typical cross-section of this part of the furnace. It shows quite clearly the method of insulation and the construction of the fire-brick bottom on which rest cast-iron sections which are likewise insulated and lined with fire-brick. These sections are made shorter than the bottom section on which they rest and, after assembling, are sealed with fire-clay, thus providing for expansion.

The proper insulation of this furnace is a very important factor in speed of operation and considerable experimental work was done by Mr. Kathner along this line. By thoroughly insulating the bottom it is possible not only to conserve heat, but to increase radiation to the sheet and to produce a better texture in the sheet, due to the uniform heating obtained by keeping the temperature in the bottom of the furnace almost equal to that immediately above the rolls.

To tie the furnace laterally, cast-iron buck-stays are placed along the side and are connected by channels under the furnace, set in recesses in the foundation. Fig. 2 shows the supports for the conveying mechanisms and the run-off trough, and water-pipes for the cooling systems. These are made entirely separate from either the bottom or

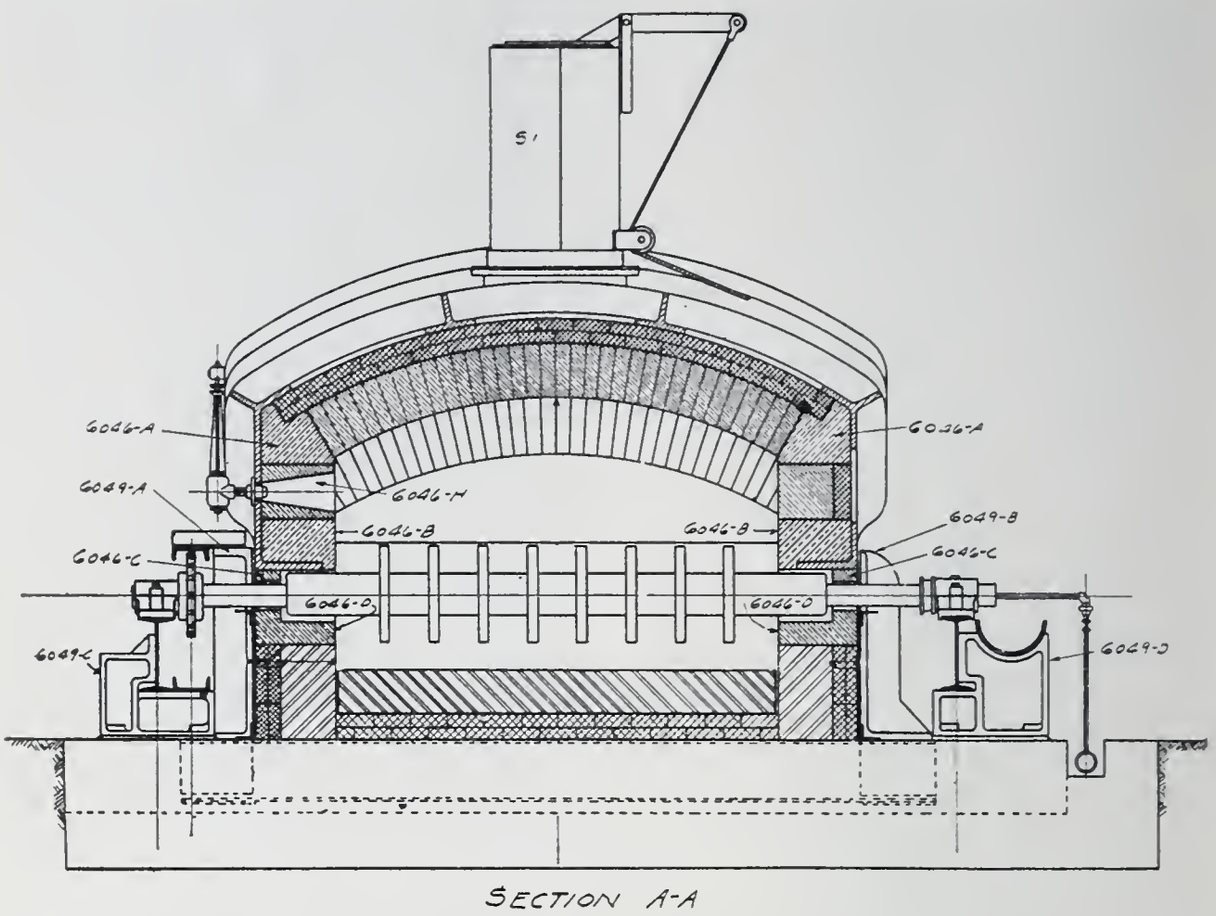

Fig. 2. Cross-Section of Heating Zone.

top sections so that distortion in the furnace wall will not be communicated to the bearings. A sufficient clearance is allowed around the shafts to permit normal expansion movement and yet it is kept small enough so that the gases will not have a tendency to flow out. These ports are closed on the outside with cast-iron packing glands which prevent the exit of gases.

Two independent sets of burners are necessary so as to permit the use of oil at a time when natural gas is not available. For the oil burners it was decided to use inducing burners (manufactured by the Smokeless Oil Burner Company, of Bucyrus, Ohio), which operate with high-pressure steam as the atomizing agent. The gas burners are of the self-aspirating type and were furnished by the Needham Gas Appliance Company, of Passaic, N. J. They use high-pressure gas and aspirate their own air, consequently they are very easily controlled by automatic equipment.

Fig. 3 shows the cooling zone, and in many respects this is similar to the heating zone. The same general type of construction—that is, an insulated bottom and the sectional-type top—is carried out, but

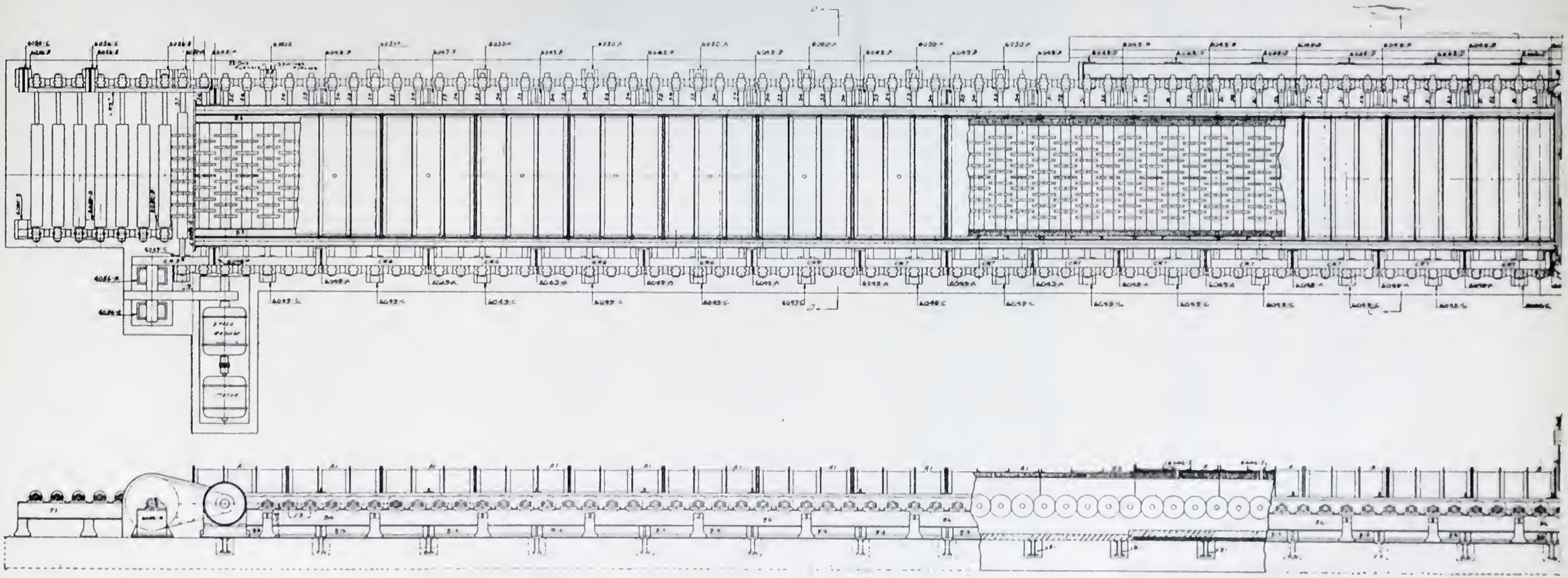

Fig. 3. Plan of Cooling Zone.

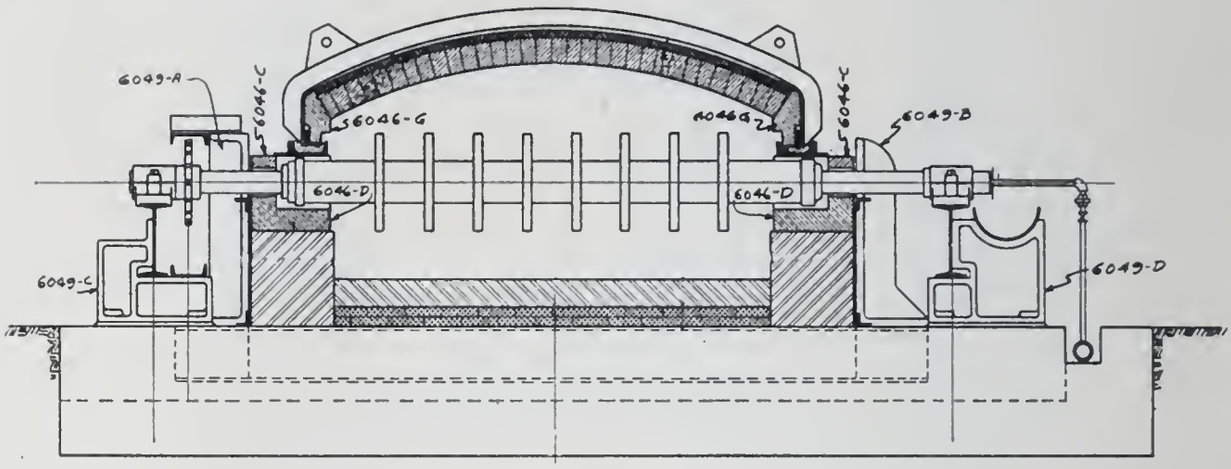

SECTION C-C

Fig. 4. Cross-Section of Cooling Zone.

the roof is lowered (See Fig. 4). The cooling zone requires no heat storage, as stored heat in this case would have a tendency to prevent the rapid cooling of the sheet which is necessary to give certain deep drawing qualities. The top sections in this part are made of structural steel and are insulated and lined with brick. In this portion the sheet is cooled from its maximum temperature to a temperature low

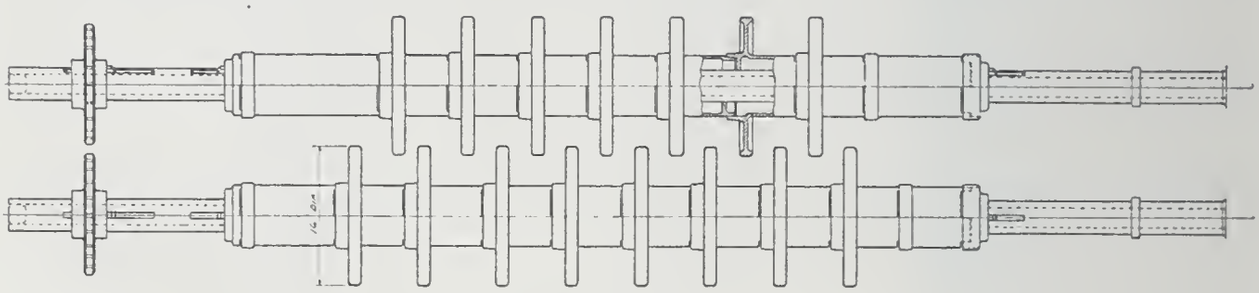

TYPICAL SHAFT ASSEMBLY

Fig. 5. Kathner Patented Shaft.

enough to allow piling without grain growth or to a temperature of about 900 degrees F.

The conveying mechanism used throughout the furnace consists of insulated shafts of the Kathner type as shown in Fig. 5. There are 86 of these shafts made of "Duraloy" and 40 of semi-steel. These shafts consist of seamless steel tubes on which are mounted "Duraloy" or semi-steel disks and spacers, and the space between the hub and the shaft is filled with a special insulating mixture which is found to be particularly suited for this work inasmuch as it does not have a tendency to pulverize and drop out. The disks and spacers are lined on the shaft by means of fingers which insure a uniform amount of insulation

around the seamless tube. These disks are bored slightly larger than the diameter of the tube, thereby making sure, in addition to ease of assembly, that not more than one of the three points on each disk will come in contact with the tube. This tends to cut down conduction of heat from the rim to the tube and results in the disks being at practically furnace temperature all the time, which would not be the case if a solid-hub disk were used. In the old type of normalizing furnace, as I have stated before, much heat is lost through the shaft. In assem-

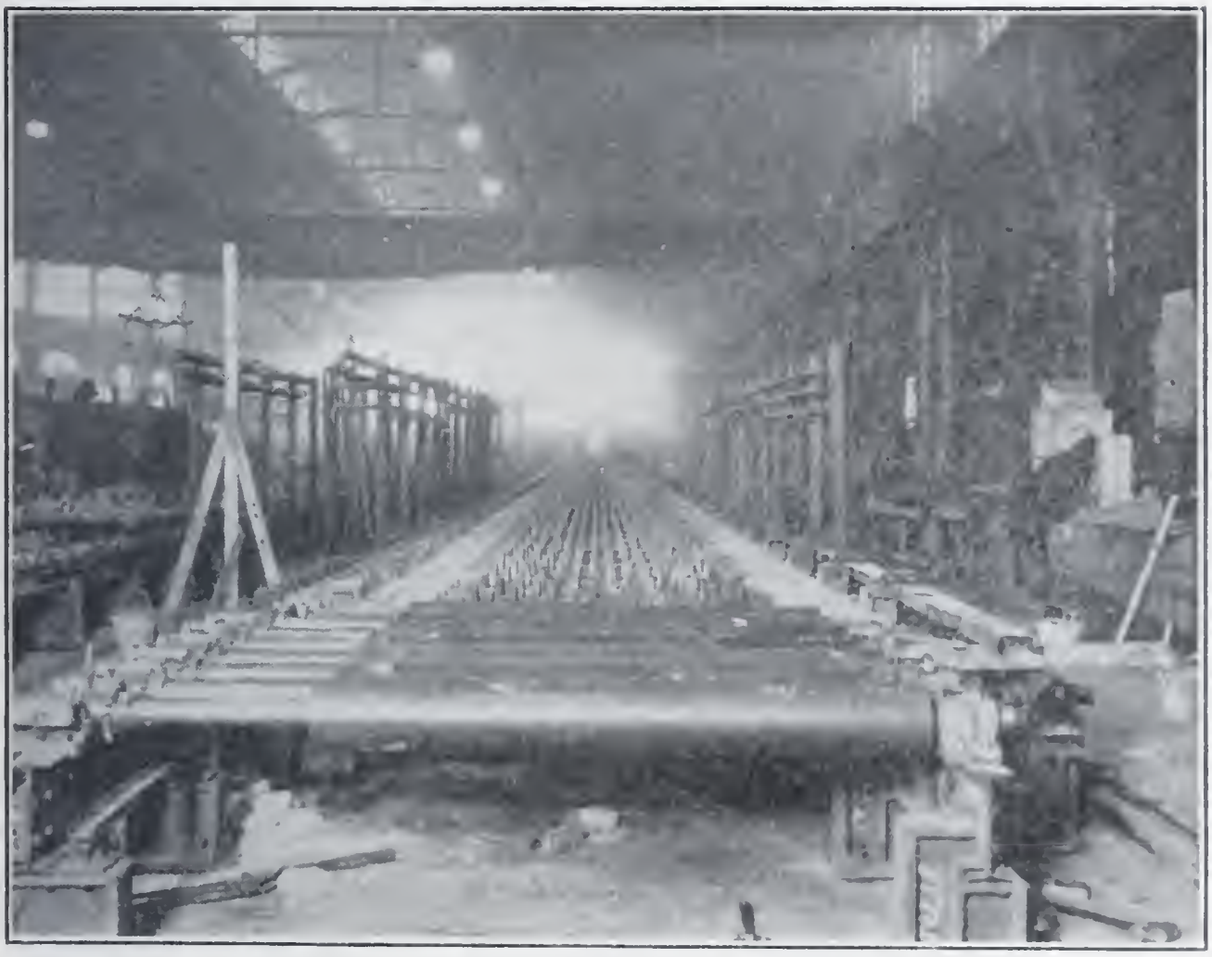

Fig. 6. Roll Table Stripped.

bling the shafts before they are erected, the total expansion is figured, and the disks spaced with sufficient clearance to provide for the maximum condition.

The driving collars are then keyed fast and the key welded in place so as to prevent any creep along the shaft, as this would tend to cause binding on the side wall. The disks and spacers are constructed with dog ears and match into each other and into the driving collars at the extreme ends, which are keyed to the shaft. One end of the

shaft is plugged, and the other end is connected with the water-cooling system. This end also has a brass drip-cup which prevents the water from traveling back along the tube to the bearings and from there to the floor, eliminating the sloppy condition of the floor commonly found around normalizing furnaces. An arrangement of 15 inches from center to center of shafts and eight-inch spacing of disks on the shafts, with a stagger, was developed as being the most satisfactory to handle all types of sheets from the lightest gage up. Shafts with "Duraloy" disks were used throughout the heating zone and for some distance into the cooling zone, and the rest of the furnace was equipped with semi-steel disks. Semi-steel was decided on as it gave better results than cast-iron, which has a tendency to grow, and is not as resistant to heat.

The insulation of the shafts presented a problem due to the fact that the maximum temperatures encountered are at or near the limits of an uncalcined material. Most plastic or powdered forms of insulating materials have a high percentage of shrinkage at these elevated temperatures. The question of using a powdered form was found

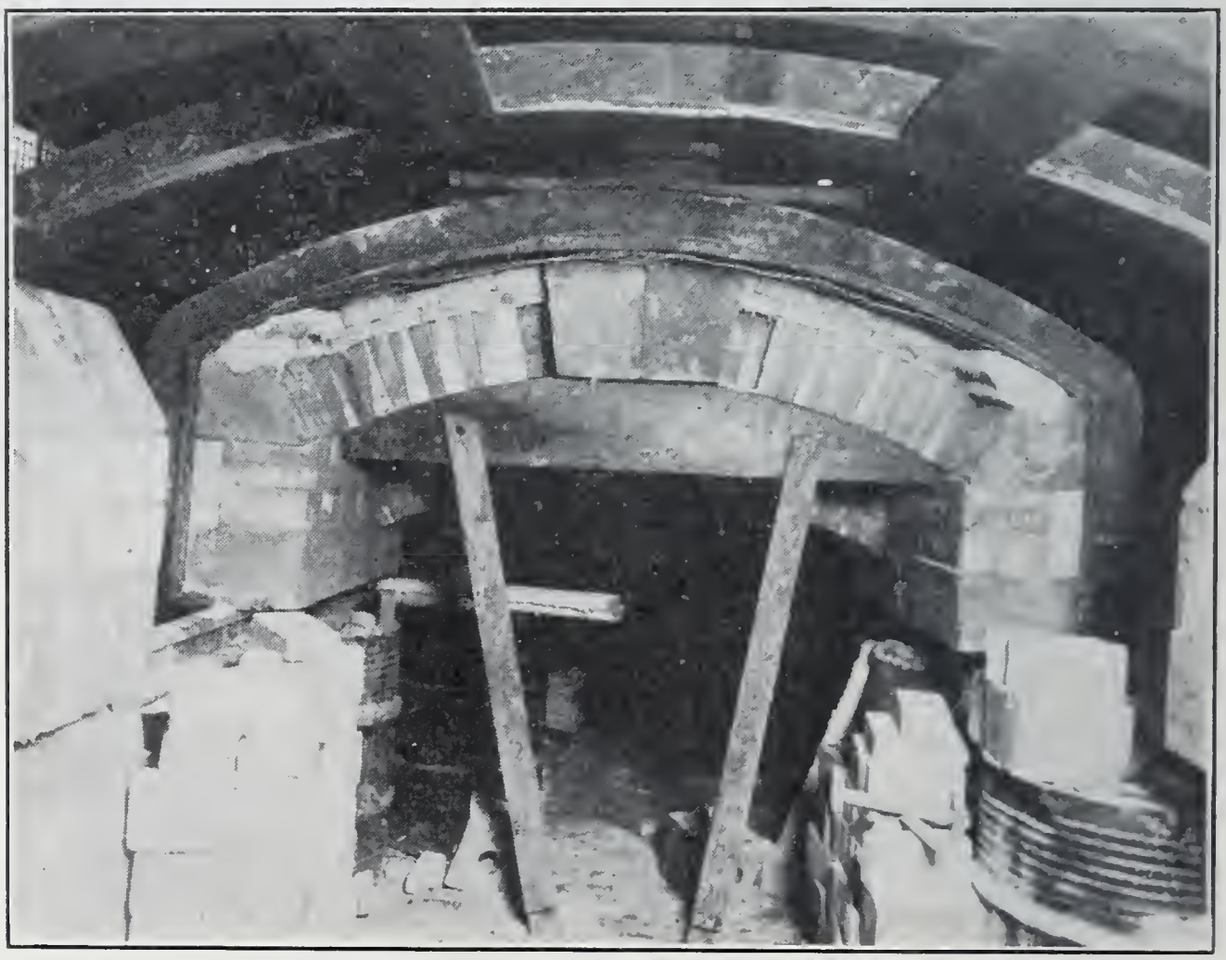

Fig. 7. Assembling Top Sections.

impractical not only from the standpoint of excessive shrinkage, but due to the inability of preventing it from running out through the spaces left between the disks for expansion. The addition of a binder to the powdered form did not prove sufficient to hold it in place and a search was made for some material that would overcome this difficulty. A fibrous form of material was tried and this, due to its fibrous condition, was more successful, but in order to secure further strength a semi-refractory binder was added, which, while it slightly reduced the insulating value of the fibrous material, more than made up for this in the reduction of shrinkage and tendency to shift, which were completely eliminated.

The lining of the top sections, walls, and bottom (See Fig. 7) were of a material having a high heat-insulating value so that thin

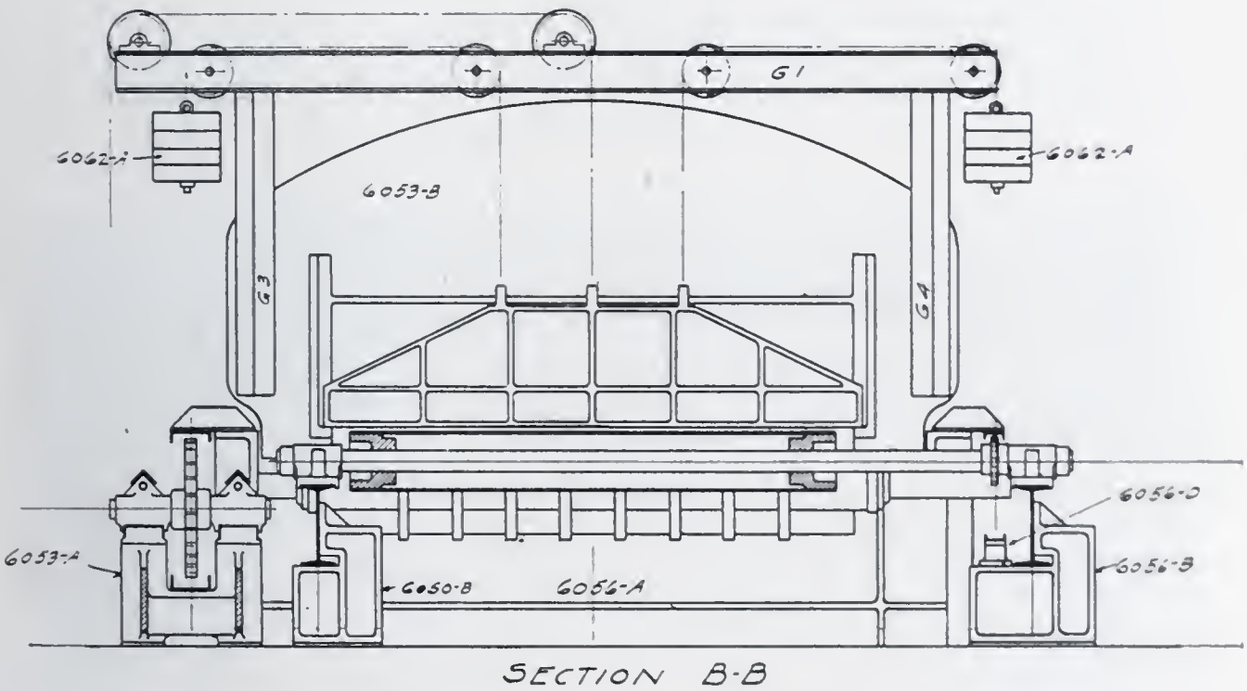

Fig. 8. Cross-Section Showing "Duraloy" Door.

sections could be used in order that the construction might not become bulky. It was further desired to use a material that came in rather large slabs so as to increase the speed of erection. Here also shrinkage bears an important part, and for these reasons "Super-ex" was used and has proved very satisfactory.

The sectional type of construction used in this furnace is of such a nature that all of the units of any section—that is, either the cooling or heating zone—are interchangeable, except the two end sections in

the heating zone. These two end sections have a taper and are provided with a stack opening, and that one which is assembled nearest to the cooling zone has a stack installed on it. This stack, however, is incased in a steel jacket and can be lifted off as a unit. Between the heating zone and the cooling zone is placed a "Duraloy" door. By means of this stack and door a perfect control of the temperature and atmosphere in the cooling zone can be maintained (See Fig. 8). If the cooling is taking place too quickly, it is possible to close the damper on the stack, open the door, and allow more products of combustion to escape through the cooling chamber, thereby maintaining a slightly higher temperature or a more reducing atmosphere. After the furnace is once in operation it is very seldom necessary to change this adjustment (See Fig. 9). It is, however, very easy, and more than justifies its installation, by the results obtained.

One of the features of the very successful operation of these continuous sheet-normalizing furnaces is the automatic temperature-control equipment supplied by the Brown Instrument Company. This

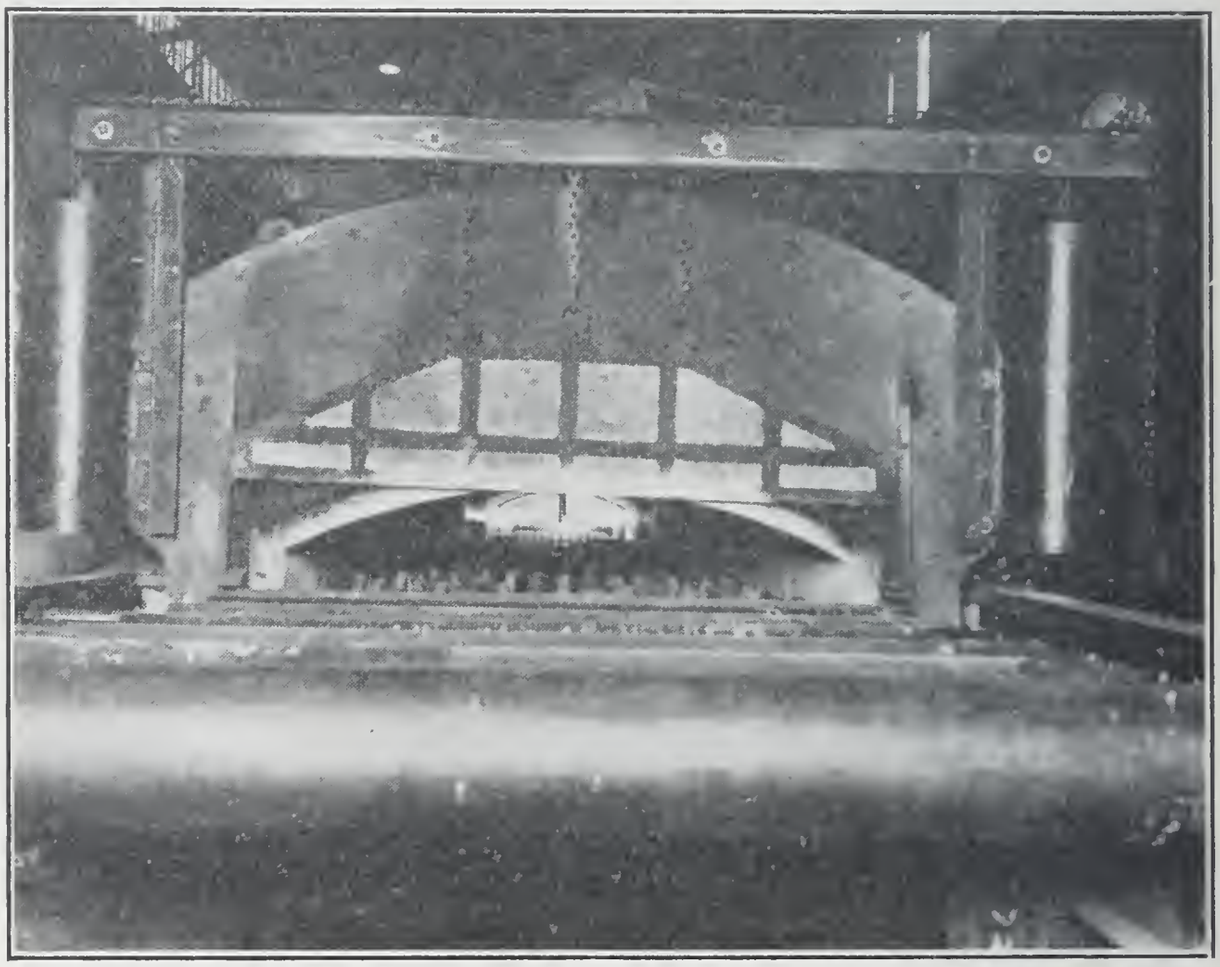

Fig. 9. Door of Furnace.

equipment consists of two automatic temperature controllers to each furnace, placed so as to control two definite heating zones to which the fuel is automatically regulated to give uniform annealing temperatures in the particular zone to which they are applied. Although at the present time these furnaces are fired by steam-atomized oil, and the automatic control mechanisms are functioning valves on the oil and steam lines, these control mechanisms are also provided with valves to be placed in high-pressure gas lines in case it should be desirable or more economical to use natural gas at some later time.

For the special convenience of the furnace operators all of the controlling instruments and mechanisms are placed at a point central to the two furnaces. The operator can here observe the chart records of the four recording control instruments, and easily vary the actual temperatures at which he wishes to operate the furnaces, changing these temperatures according to the requirements of the sheets being annealed. The four control mechanisms with their valves are located near the control recorders so that the operator can conveniently and quickly make any necessary valve adjustments, and at the same time observe changes in furnace temperatures resulting from this valve adjustment.

In addition, the Brown Instrument Company furnished flow meters for metering the amount of steam used for atomizing the oil and for metering the amount of water used for the water-cooled shafts of the furnace, a recording thermometer for recording the temperature of the water leaving the shafts, and recording-pressure-gages for observing the constancy of the steam pressure on the lines to the furnace burners. In fact, on these furnaces nothing has been left to chance or guesswork, and sufficient equipment was used so that the furnaces could be operated with reliable and accurate information regarding all the different factors entering into their performance.

In connection with this automatic control we have accomplished something that a great many people believe is impossible. The control equipment when working on the oil and steam has acted so accurately that the pyrometer readings on the automatic pyrometers show an absolutely straight line over a long period of time, showing that it is possible to control steam-atomized oil as easily as gas.

The recording pyrometers were of the Leeds & Northrup potentiometer type.

On one end of each shaft is mounted a sprocket over which runs a chain of the roller type. This is driven by a main-drive sprocket at the discharge end of the furnace, which is connected up with a spur-gear speed reducer driven by a variable-speed motor. The return chain is carried back along a channel just under the sprockets. The first and last rolls of the furnace have auxiliary chains which drive the roll tables provided at each end of the furnace. (See Fig. 10.) This

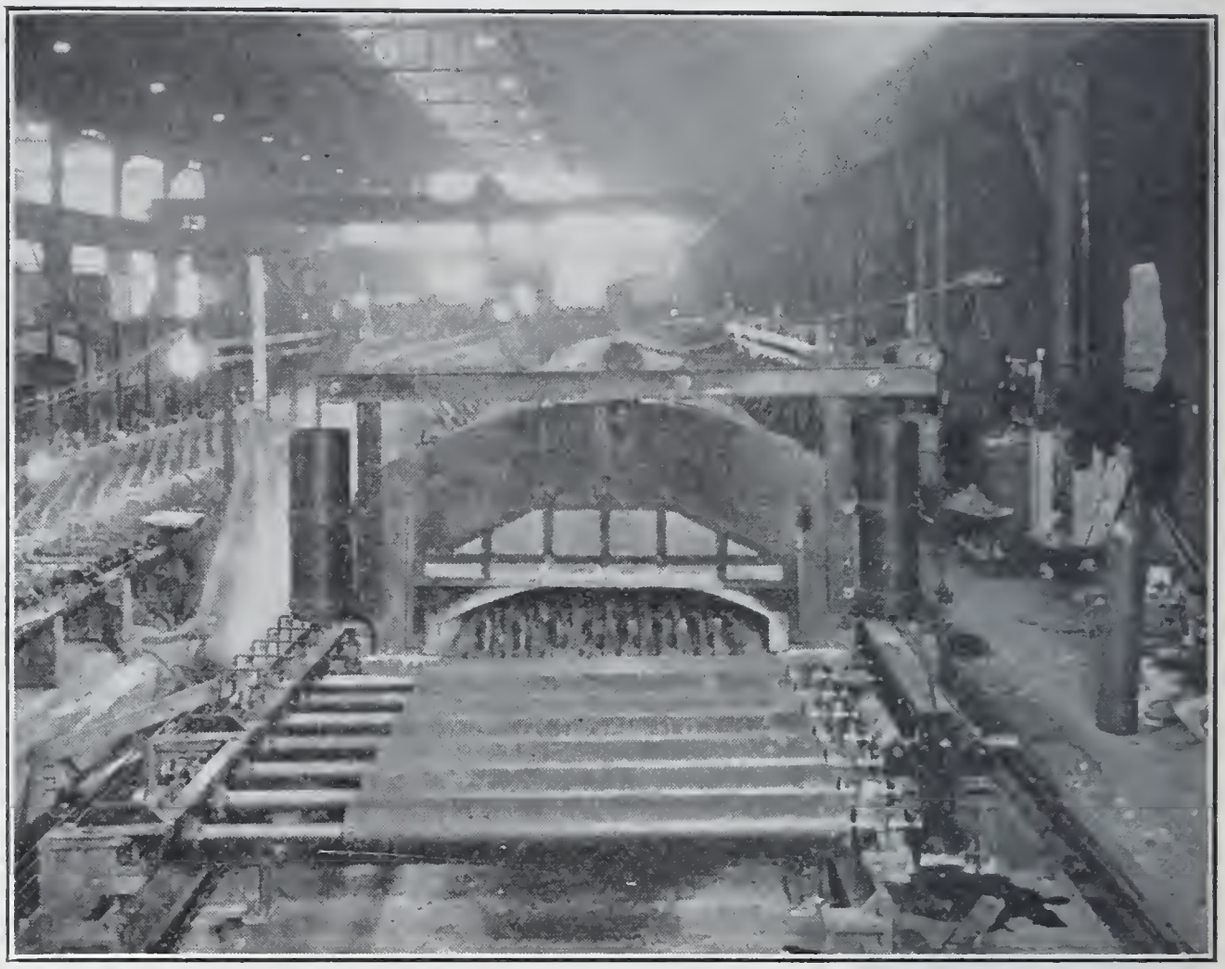

Fig. 10. Charging End of Furnace.

means that with one drive we are driving all the rolls of a furnace 155 feet long and 15 feet of roll table. This, we believe, is a record, and we know of no other normalizing furnace in the country nearly as long, driven with a single chain-drive. Up to this time about the longest continuous normalizing furnaces that had been erected were about 100 feet, and most of these were gear driven. As far as I know, the longest chain-driven furnace that was in operation at this time was one about 50 feet long, in the plant of the Sharon Steel Hoop Company at Youngstown.

The weight of these shafts is in the neighborhood of 900 pounds each and, there being 126 shafts in the furnace, you can easily see that there is quite a mass to be handled by this one chain. By means of the variable-speed motor it is possible to produce in this furnace speeds varying from nine feet to 36 feet per minute. This is necessary in order to take care of a wide variation in the gages of sheets to be handled.

In operating a furnace of this type there are several points where this furnace is, we believe, superior to any other type of furnace on the market. The main points are as follows:

1. The thorough insulation of the furnace gives a uniform heat throughout the heating chamber from a point well below the sheet level to the crown of the furnace. This insures the thorough normalizing of the sheet and produces uniformity of product.

2. This furnace, due to its thorough insulation, operates on a smaller quantity of fuel than any other continuous normalizing furnace.

3. The sectional type of construction eliminates distortion of the furnace by expansion.

4. The sectional type of construction allows ease of access for inspection or repairs to the conveying mechanism and in time of breakdown allows one section to be removed and a shaft changed without complete shut-down with its consequent loss of heat to the whole furnace. It is possible to turn off the burners, remove one section, remove a shaft, replace it, replace the section and start the furnace up again within a couple of hours, with very little loss of heat in the furnace.

5. The insulation of the shafts reduces the water consumption to a minimum. Other normalizing furnaces usually use about 200 gallons of water per shaft per hour, while in this type of construction we use a maximum of about 40 gallons of water per shaft per hour.

6. It is possible to control the temperature very accurately by means of the stack and door in conjunction with the automatic control, thereby insuring uniform product.

With a furnace of this type it is possible to obtain practically all results that are obtained by box anneal, except the bright or white anneal. It is also possible to give the first anneal of what is known as the "double box anneal" in this furnace. This means that a plant can

eliminate considerable of its box annealing, thereby releasing capital that is now tied up in annealing boxes, as the quantity needed can be reduced considerably. In addition, it saves considerable time and labor and assures more uniform results. It is possible to obtain structures as shown in the following figures, all of which are magnified to 100 diameters. Fig. 11 is what is commonly known as a standard box anneal. It can be obtained in this furnace by simply increasing the speed of the sheet through the furnace approximately 15 to 20 per cent. over that used for normalizing. Fig. 12 is a normalized sheet that has not been box annealed. Fig. 13 is of standard radiator shell

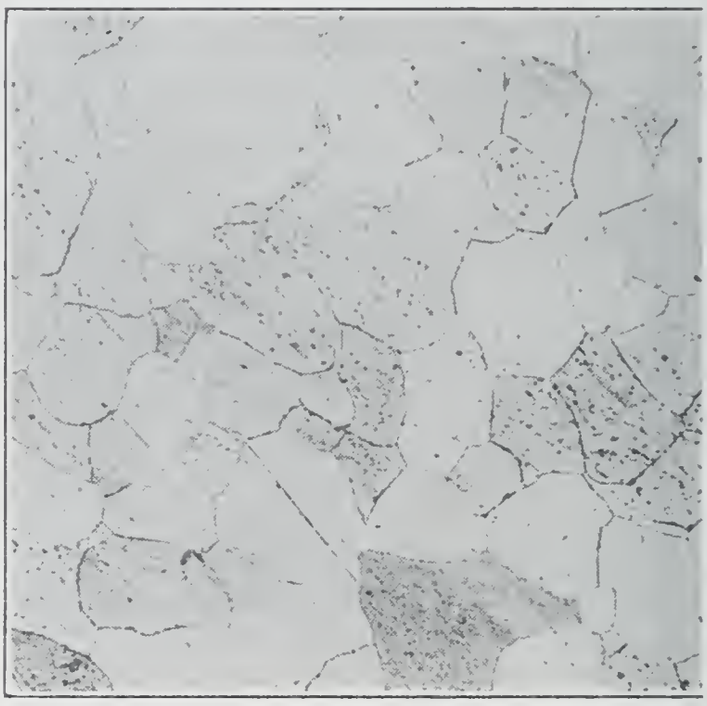

Fig. 11. Box-Annealed Specimen.

stock. It is possible to get even finer grain structures, depending upon the method of operating the furnace. Table I shows the output in tons of 2000 pounds of 16-gage sheets of various widths. These figures are based on actual runs and are conservative. They, of course, do not take into consideration the fact that for certain grades of sheets it is necessary to use a waster to eliminate scratching. In such cases, the output of full-finished sheets would be about 80 per cent. of the figures in the table.

Based on several months' operation at Weirton, W. Va., Mr. Kathner found that it was possible to normalize sheets with 5525 cubic feet of coke-oven gas per ton of sheets, which at 10 cents per

Fig. 12. Normalized Specimen.

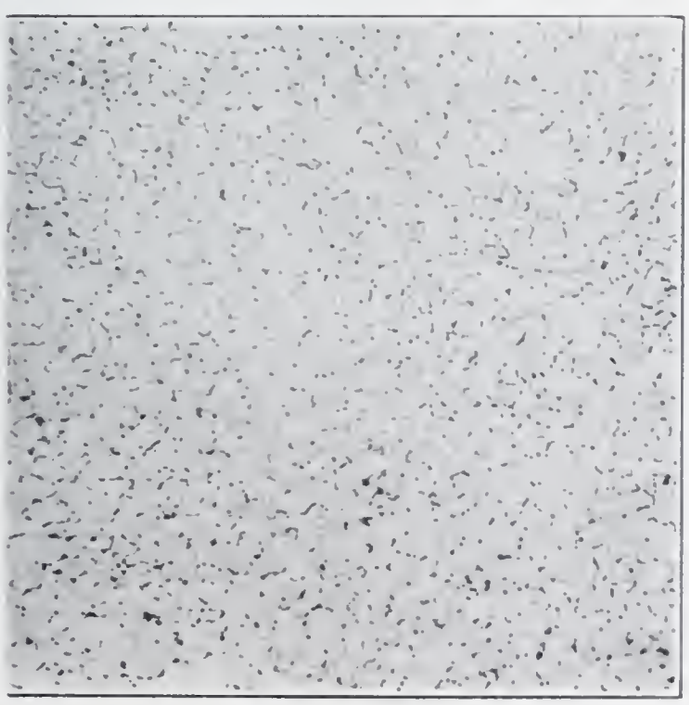

Fig. 13. Normalized Fender Stock.

TABLE I. OUTPUT OF FURNACE

50 ft..... Heating zone .....75 ft.
50 ft..... Cooling zone .....80 ft.
36..... Burners 48
15... ..... Ft. per minute 22

Width of sheet, inches	16-gage sheets or their proportionate equivalent					
	Hour	24 hours	28 days	Hour	24 hours	28 days
20	3.56	85	2380	5.34	128	3584
22	3.85	92	2570	5.77	138	3864
24	4.17	100	2800	6.25	150	4200
26	4.46	107	2996	6.69	160	4480
28	4.82	115	3220	7.26	170	4842
30	2.6	62	1736	3.9	93	2604
32	2.78	66	1848	4.17	100	2800
34	2.9	69	1932	4.35	105	2940
36	3.1	74	2072	4.65	111	3108
38	3.28	78	2184	4.92	118	3304
40	3.56	85	2380	5.34	128	3584
42	3.6	86	2408	5.4	130	3640
44	3.85	92	2570	5.77	138	3864
46	4.	96	2688	6.	144	4032
48	4.17	100	2800	6.25	150	4200
50	4.4	105	2940	6.6	158	4424
52	4.46	107	2996	6.69	160	4480
54	4.64	111	3108	6.96	167	4676
56	4.82	115	3220	7.26	170	4842

thousand cubic feet, would amount to 55 cents a ton for fuel only. Using natural gas at 45 cents per thousand cubic feet this would be equivalent to a fuel cost of $1.23. These figures do not include labor. If you assume a foreman at 65 cents an hour and three laborers at 47½ cents an hour, it will average around 57 cents a ton. Assuming 10 cents a ton for overhead and 30 cents a ton for depreciation and interest on investment, it gives a net cost of $1.52 a ton with coke-oven gas, or $2.20 for natural gas at 45 cents.

With oil these figures would be slightly higher. It should be possible to normalize with less than 25 gallons of oil per ton, which, at 7½ cents a gallon, equals $1.88 for fuel, or a net cost of $2.28 a ton. These figures are, we believe, conservative and can be bettered, especially with wide sheets.

We have not taken into consideration any saving due to the fact that most of the material that goes through these furnaces does not require roller leveling, and this is a saving that should be credited up

to these furnaces. We believe that it is not possible to make a standard furnace that meets all requirements, consequently we treat each individual furnace as a problem in itself. It is possible by lengthening these furnaces to handle even larger quantities with the same labor charges. This, of course, tends to cut down the labor cost per ton.

In concluding, the Duraloy Company would like to acknowledge the debt due to the former associates of Mr. Kathner in the iron and steel industry for their advice and encouragement in his earlier experiments; particularly to Mr. J. C. Williams, Vice-President and General Manager of the Weirton Steel Company, for his personal interest and assistance which, together with the co-operation of his engineers and operating staff, made it possible for Mr. Kathner to build his first complete furnace; also to Mr. E. F. Clarke, President of the Newton Steel Company, and his associates, for their confidence in Mr. Kathner's ability to design a continuous annealing furnace best adapted to their particular needs.

Fig. 14 shows the charging end of the two furnaces built at Newton Falls, and Fig. 15 the discharge end.

Fig. 14. View of Furnaces from Charging End.

Fig. 15. View of Furnaces from Discharge End.

DISCUSSION

L. W. HAAG:* I have been very much interested in the paper. There is one question I would like to ask about the expansion joints. No doubt there are numerous joints in that furnace and it occurred to me in looking at the slides that possibly those joints might give trouble. Due to expansion and contraction, the fire-clay would fall out or crack so badly that it would be very difficult to keep a tight furnace.

A. T. KATHNER:† Do you mean the joint in the top section or the bottom?

L. W. HAAG: Along the sides and the top.

*Chief Engineer, Apollo Steel Co., Apollo, Pa.
†Duraloy Co., Pittsburgh.

A. T. KATHNER: When the furnace is erected we allow a space of about 5/8 inch between each two sections, for expansion; seal this with a strip of asbestos, and then spread fire-clay over the asbestos, thereby permitting expansion of the sections. By using broken joints, sufficient allowance is made in the bottom section for expansion. The first furnace of this type of sectional construction, which has been in constant use for over sixteen months, shows no indication of burning or weakening of these top sections. All joints, when sealed, give a tight construction and do not permit gases or heat to be wasted.

O. D. RICE:* The foundations of the present furnaces are not cooled and there has been some cracking due to the fact that the foundations do not carry away heat as rapidly as it is transmitted through the furnace bottom. The foundations of the new furnaces will be air cooled.

CHARLES LONGENECKER:† I am very much interested in this furnace and especially in its flexibility. I have been wondering what atmosphere is maintained in the furnace throughout its length.

A. T. KATHNER: By using this furnace with the stack damper closed a pressure is maintained in the heating zone and the excess products of combustion are passed into the cooling zone or chamber to maintain the semi-reducing atmosphere. This point was not made clear in the paper by Mr. Mills. The result is that the sheet or strip of steel comes out of the discharge end, free from loose scale, having on each side a tight coat of blue oxid approximately 0.001 inch thick. This pickles off in about one-third of the time necessary for other types of annealed sheets, due principally to the fact that we have a noticeable freedom from blisters or loose scale.

E. BUSCHOW:‡ Do you believe that the open continuous normalizer or annealer will ever replace box annealing partly or wholly in manufacture of full-finished, deep-drawing, automobile body sheets and other similar material?

*Engineer, Rust Engineering Co., Pittsburgh.
†Managing Editor, *Blast Furnace and Steel Plant*, Pittsburgh.
‡Sales Engineer, Surface Combustion Co., Pittsburgh.

A. T. KATHNER: No. We do not claim to accomplish bright annealing in this type of furnace. By this we wish to say that for the second or low-temperature annealing after cold rolling it is still advisable to use the box-type annealer. While we expect that this handicap will be overcome, it has not, to my knowledge, proved successful.

JULIAN KENNEDY, JR.:* How many sheets is it possible to put through in a pack?

A. T. KATHNER: That depends on gage or thickness of the sheet. We have successfully annealed three 18-gage sheets at once. For normalizing, we prefer to run no more than two 18-gage sheets or three 20-gage sheets at one time. This, of course, all depends on the individual requirements of the order.

Your attention is also directed to tests made with the aid of pyrometers, showing a difference of only 70 degrees F. between the crown or top of the heating zone, and the bottom of the furnace underneath the conveying disks, with steel going through the furnace at the rate of 120 tons in 24 hours. The difference in temperature underneath the disks was one of the disagreeable features of the other types of over-fired furnaces, which we are proud to say is overcome in our installation. We also found that equally good results were obtainable at either side of furnace; that is, the distribution of heat was equal, and the same grain structure was obtainable, throughout the width of the hearth as was formerly obtainable only in the center of the furnace.

By a closer spacing of conveyor disks, as at Weirton, we can successfully convey through the furnace strip steel as narrow as 2⅜ inches in width, and 36 inches in length. This relatively close spacing of disks is more expensive, and is not necessary for sheet-mill products. It has, however, been found that the best practice was not to run sheets nearer than eight inches to the side walls, thereby allowing a sufficient space for heat transfer.

E. BUSCHOW: Do the sheet surfaces pit due to over-firing of oil?

A. T. KATHNER: This is another point where the furnace exceeded all expectations. As our previous furnaces were using either

*With Julian Kennedy, Engineer, Pittsburgh.

natural gas or coke-oven gas, we were reluctant to promise that, when using fuel-oil, the previous trouble of "combustion pits" would be corrected. However, through changes recommended by Mr. O. D. Rice, of the Rust Engineering Company, a satisfactory burner was developed.

G. E. Dignan, *Chairman*:* There was nothing said about the power; can you tell us how much power was used on these furnaces?

O. D. Rice: The power consumption is much lower than we had expected. The starting load is about nine horse-power, and the running load about three horse-power, when the furnace is running at 50 per cent. full speed.

C. P. Mills: The journals in this furnace were not turned; neither were the shafts. The shafts were composed of seamless tubes. However, on all later furnaces we are turning both the journals and the shafts.

G. E. Dignan: What about the type of fire-brick? Is it just the standard first-quality fire-brick?

C. P. Mills: Yes.

E. Buschow: What possibility is there of omitting the waster in continuous open annealers when producing full-finished material? What will be accomplished if the waster can be omitted?

A. T. Kathner: If I could answer that I would be in an excellent position to make a fortune. We all know that the users of high-grade automobile sheets are becoming more exacting in their requirements. A sheet which is now considered acceptable may, within a few months from now, be classed as unsuitable.

G. E. Dignan: Do you care to say anything as to the method of "truing up" the rolls and how often this has to be done?

A. T. Kathner: No, I would rather not commit myself. It depends entirely upon conditions.

*Chief Engineer, Rust Engineering Co., Pittsburgh.

L. VAYDA:* Mr. Mills stated that the grain structure of the sheets is varied by varying the speed of sheets through the furnace. Could this be explained further?

A. T. KATHNER: You, no doubt, refer to controlling the grain structure. This is accomplished by dropping the temperature of the sheet within a predetermined range. This, in normalizing practice, is found to be from 1770 to 1500 degrees F., after which further cooling is retarded in the reducing atmosphere to a temperature of between 1000 and 900 degrees F. before leaving the discharge end of the cooling-zone section. The result is increased ductility not obtainable in the shorter furnaces. You are also in this case, for reasons stated above, able to make up the sheets at the discharge end of the furnace into large lifts—say about five tons—whereas, if the sheets were piled at a temperature of 1400 or 1500 degrees F., the lifts would have to be removed when they reach a height of about six inches. Otherwise the accumulated temperature in each lift would be sufficient to cause grain growth.

E. BUSCHOW: The large grained photo-micrograph shown in Fig. 11 was referred to, I believe, as a double box annealed size grain. Was this accomplished in the normalizer only? Did the paper not state that the furnace was speeded up to get a large grain and vice versa for a small grain? If so, to what temperature was the work subjected? What is the carbon content of the samples shown on the screen?

A. T. KATHNER: I believe the so-called "breaking up" of the grain structure takes place when the sheet is thoroughly soaked at a temperature of 1770 degrees F. When working the furnace at a lower temperature—say 1600 degrees—and at a rate of travel which does not permit a thorough soaking, the breaking up of the grain structure is not regular, or does not reach the degree of refinement obtained at the higher temperature and proper soaking time.

E. BUSCHOW: Is not the grain size determined by a characteristic time-temperature cycle? If so, what variations in either time or temperature produce various sized grains? Also what effect has carbon content?

*Engineer, Bacharach Industrial Instrument Co., Pittsburgh.

A. T. KATHNER: As strip steel is finished at a higher temperature than sheet steel you have an entirely different grain structure to start with. In other words, in sheet steel, the coarser grain is evident and, to overcome this, sheets are normalized.

E. BUSCHOW: Has not the strip steel photo-micrograph shown in Fig. 13 been subjected to box anneal after normalizing?

A. T. KATHNER: The illustration in question is sheet steel, not strip steel. Again I say that in the continuous furnace of this design you can get any kind of grain structure desired, as it is only a combination of temperatures, and time in heating and cooling zones.

E. BUSCHOW: Referring again to speeding up the furnace to produce a very small grain, as I understood you to infer, would not a pinhead size grain (when magnified to 100 diameters) then be accomplished by a relatively short time in the furnace?

A. T. KATHNER: No, I would not say it would be possible to get a smaller grain than was shown in Fig. 13. For your information, the measured sizes of this grain were found to be 0.0033 inch for the smallest, ranging to 0.0055 inch for the largest. In other words, by increasing the soaking time beyond the required period, no further benefits would be derived and you would run the risk of overannealing.

E. BUSCHOW: Would the speeding up of the furnace with atmosphere temperature constant tend to produce banded or otherwise incomplete normalized structure?

A. T. KATHNER: No, it would never reach the upper critical range and have sufficient time to soak. In other words, the ultimate in refinement could not be reached. Do you now understand the thought I wish to convey?

E. BUSCHOW: Your statement that the large grain was produced by heating the steel to a point under the Ac3 range, slowly cooling and not giving the grain a chance to break up, seems to be

contrary to the theory that "in order to normalize in a minimum time as in a continuous furnace it is necessary to heat low-carbon steel to the solid solution range first." If this be so, it would be interesting to know of this new development.

A. T. KATHNER: The fine grain structure is the result of normalizing. The larger grain indicates one of two things—either the refinement or breaking up was not complete, due to reasons stated above, or the cooling was retarded sufficiently to permit a secondary grain growth after initial refinement.

E. BUSCHOW: You say, then, that the grain can not be increased in size by slow cooling?

A. T. KATHNER: The only way to increase the grain size after normalizing is to pile the product at a temperature of about 1400 degrees. As the size of pile does not permit cooling through the lower ranges, you would have a secondary grain growth, naturally increasing the size of grain structure.

E. BUSCHOW: I have found the opposite to be true; that is, in slow cooling, especially through a certain temperature range, grain growth is quite noticeable, especially in the low-carbon steel such as 0.03 to 0.06 per cent.

T. J. LUTZ:* Did I understand that it cost about 15 cents more for oil firing than for natural-gas firing?

C. P. MILLS: No, I did not say that. I stated that it cost about $2.28 when the furnace was oil fired, and $2.20 with natural gas at 45 cents. This, of course, includes labor, and is a rate per ton. The same depreciation and overhead were used in both cases.

T. J. LUTZ: At what price for oil?

C. P. MILLS: Oil at 7½ cents. This is based on the fact that you are normalizing. We believe that it is possible to normalize on less than 25 gallons a ton. It will depend, to a certain extent, upon whether or not you are running wide sheets or lighter gage, and

*Engineer, Superior Steel Co., Carnegie, Pa.

whether or not they are packed. In other words, it depends entirely upon operating conditions.

L. B. McMillan:* I have been most intensely interested in this paper and its discussion, because of the convincing manner in which Mr. Mills emphasizes the practical results obtained through the use of insulation on furnaces. The results have been shown by the paper to be not only in the saving of heat, though that in itself is a very important consideration, but in this furnace, and in a great many other cases as well, there are also other advantages which may be of even greater value than the fuel saving. Among these are the maintenance of more uniform temperatures and the increased radiation back from the floor and walls of the furnace to the product, which insures uniformity of product and increased production.

The subject of furnace insulation is receiving more attention to-day than it ever has in the past. Not very long ago furnaces were rarely insulated at all. There was considerable reason for that, of course. Fuel was cheap—so cheap that the necessity for saving it was not nearly so great as it is now. But even with the cheap fuel, had the other practical advantages been realized as they are now, the importance of this question would have received much more recognition.

At the present time, practically every furnace installation receives consideration from the insulation standpoint. Of course, there are some that operate at extremely high temperatures, such as the open-hearth furnace, which, with refractories available, may not be insulated. Yet, even in such cases, there are portions of the equipment where insulation is highly important, as, for example, on the regenerator checker chambers, where it has the double effect of saving heat and minimizing air leakage. The results here are shown not only in a saving in fuel per ton of steel produced, but also in increased speed of heats, diminished air leakage, and increased amounts of steam produced by waste-heat boilers.

Likewise, insulation is being sucessfully used on or in connection with practically every type of furnace and kiln; therefore, as I said in the beginning, I have been very much interested in this paper in that it brought out the advantages of insulation in the way of increased production and uniformity of product, as well as in the saving of fuel.

*Consulting Engineer, Johns-Manville Corporation, New York.

A CENTURY OF THE PITTSBURGH WATERWORKS*

By E. E. Lanpher†

Descriptions of portions of the waterworks of the City of Pittsburgh have on several occasions, been presented to this Society. However, there has been presented no general description of the plant, and the occasion of the centennial anniversary of the completion of a waterworks system in the central portion of Pittsburgh is an appropriate time to present some of the history, and a description of the present water plant.

Tables of plant and operation costs, services rendered and results obtained are purposely omitted, as they belong to the realm of municipal reports.

Historically and topographically, the waterworks is separated by the Monongahela, Allegheny and Ohio rivers into three parts—the central city or "peninsular" Pittsburgh, the North Side (formerly Allegheny), and the South Side.

THE CENTRAL CITY

The first known attempt to obtain a public water-supply is recorded in the following enactment of the Borough of Pittsburgh, when that municipality contained about 1600 persons.

"Be it ordained by the Burgesses, Freeholders and other inhabitants, housekeepers of the Borough of Pittsburgh, in town meeting duly assembled, at the Court House, the 9th day of August, 1802, that the Burgesses are hereby authorized and empowered to have wells sunk and pumps erected in such parts of this Borough as they think most advisable, beginning with Market Street. And it is further ordained that where individuals have, at their own expense, sunk wells and erected pumps in the streets, in useful and necessary parts of the Borough, that a compensation be made to them in case of their assigning them for public use. The whole expense to be defrayed by a general tax on the Borough.

Isaac Craig, Chief Burgess.
David Evans, Burgess."

The estimate of expense accompanying this ordinance was $497.96, and it is certain that at least $170 was collected, and that Walter Christy, Borough Clerk, called for proposals for four public

*Presented May 1, 1928. Received for publication November 1, 1928.
†Managing Engineer, Bureau of Water of the City of Pittsburgh, Pittsburgh.

wells on Market Street, which were to be dug to a depth of not less than 47 feet, and for the pumps to equip the wells.

In December 1813, George Evans served notice that he was ready to pump water sufficiently high, by steam power, to run to any part of the town and to supply consumers at three cents a barrel. Again, in January 1818, William B. Foster and William Hamilton petitioned for permission to supply water, but there is no record that either of these two projects materialized.

In 1824, the first definite steps were taken to obtain a general waterworks system. On February 24, Council finally passed an ordinance providing for a loan of $50,000 to construct the necessary works. Supervision was placed in a water committee composed of Messrs. Fairman, Magee, Denny, Carson and Hays. The Pittsburgh and Exchange banks advanced funds on the loan, and the committee purchased an engine-house site at the corner of Duquesne Way and Cecil Alley for $1425; also a lot 240 feet square on Grant Street (the present Court House site) for $3800, upon which to construct a reservoir.

An additional loan of $40,000 was raised in 1826, and contracts were let in December of that year for a steam pumping-engine and a reservoir. It was specified that this pumping-engine was to be able to raise 60,000 gallons in 12 hours to a reservoir of 1,000,000 gallons capacity, at an elevation of 80 feet above the town.

The plant was turned over for operation in September 1828. So much difficulty (mainly breakage of pump and pipes) was experienced that little water was delivered to consumers until 1829; in fact, it appears that the first water revenue accounted for was $3086 in 1829. The water consumption for the first three years did not exceed an average of 40,000 gallons a day, and the pumping-engine was operated about 21 hours a week.

By 1832, the water consumption had materially increased, making it necessary to purchase a second pumping-engine. The plant at this time was termed to be "in good working order" and represented an investment of $111,086.52.

During the 10 years following the opening of the plant, the city had expanded to the hill district east of Grant Street; also complaints were registered in regard to the contamination of the river water near the intake of the Cecil Alley pumping station. This resulted, in 1838,

in Council instructing the Water Committee to construct a larger pumping plant at a point "above the City," and a larger and higher reservoir. Mr. R. Moor, described as a mechanical and hydraulic engineer, was engaged to supervise the work. At this time, the city purchased a pumping-station site at Eleventh and Etna streets, and a reservoir site at Prospect and Elm streets (the Washington Park site). The enlarged plant was placed in operation July 4, 1844. It consisted of the pumping station on Eleventh Street, generally called the "lower works," equipped with two steam-driven pumps known as "Samson" and "Hercules," of a combined capacity of 9,000,000 gallons a day, each with a cylinder diameter of 18½ inches and a 12-foot stroke, pumping to the Prospect Street reservoir, known as the "lower basin," at an elevation (floor level) of 160 feet above the river. The "lower basin" had a capacity of about 7,500,000 gallons. The Cecil Alley plant and the Grant Street reservoir were abandoned at this time.

It should be noted that 9,000,000 gallons a day of pumping equipment was installed at a time when the water consumption was 1,500,000 gallons a day; that it was 20 years before additional pumping equipment was installed at the "lower works," and that "Samson" and "Hercules" functioned almost continuously until 1884—a period of 40 years.

In 1847, filtration of the water-supply was first recommended. It required a lapse of 60 years for filtration to become a reality.

In 1848, just 20 years after the completion of the first plant, the continued progress of the city toward the eastern hill section forced the building of a reservoir at Erin Street and Bedford Avenue, and a small station at the "lower basin" to pump to it. This reservoir, at an elevation of 398 feet, with a capacity of 2,700,000 gallons, was known as the "upper basin," while its pumping station was known as the "upper works." This station began operation in 1850 and continued until 1893.

In 1853, after 25 years of development, the average daily pumpage was 2,805,568 gallons; the population about 56,000; the plant valuation about $500,000, and the plant consisted of one primary and one secondary station, two small reservoirs and about 24 miles of pipe. The annexation, in 1867, of 14 wards and about 35,000 people, following the rapid growth of the old city, brought on a general shortage of the water-supply. Additional pumping units were installed, and a

small temporary pumping station was erected at Forty-fifth Street and the Allegheny River in 1870. Its three small pumps delivered an average of less than 1,000,000 gallons a day directly into the distribution system until 1880.

While the matter had been under discussion for about five years, it was 1871 before the Water Committee finally recommended the construction of a pumping station above Negley's Run, the construction of a low reservoir on Brilliant Hill (now Lake Carnegie), and a high-service reservoir at the head of Highland Avenue. It was a year later before authorization to proceed was obtained, and 1879 before any of this new plant was operated. While the work at Brilliant station and Highland reservoir was in progress, there was authorized the construction of a reservoir on Herron Hill and a secondary station to supply it at Dithridge Street, near the present Bigelow Boulevard.

In 1878, after 50 years of plant operation, the pumpage had increased to over 15,000,000 gallons a day, the population to about 106,000, the consumers to about 8000, and the plant valuation to about $2,000,000, exclusive of work under construction. The plant consisted of two primary pumping stations and one secondary station, two small reservoirs, and 105 miles of pipe-lines; also two pumping stations and three reservoirs under construction.

Brilliant Hill reservoir, although practically completed, was never used as a portion of the water-works system. It is now used as a park lake.

The first attempt, February 18, 1879, to supply water from Highland reservoir, failed, due to unconnected discharge pipes and to pipe breakage. Two days later a more successful attempt was made. Water was first turned into a small section, the resulting pipe breakage repaired, then extended into an enlarged district. This procedure was continued until March 5, when the water from Highland reservoir finally reached the "Point" section of the city. About four years were required to correct the major faults at Brilliant station and Highland reservoir.

The Herron Hill reservoir, and the original Herron Hill pumping station, started in 1878, were completed early in 1880, and the first water from this system was supplied to consumers on June 26 of that year. The one pump installed (with a capacity of 1,500,000 gallons a day) was transferred from the "upper works." The capacity

of Herron Hill reservoir is 12,000,000 gallons, and its elevation is 563 feet, Pittsburgh datum. The daily pumpage to this reservoir during the first year of its operation was less than 900,000 gallons.

The Forty-fifth Street station was closed February 24, 1879, following the opening of Highland reservoir. Except for continuous pipe-line extensions to meet the need of a rapidly extending city, there were no major plant developments from 1880 to 1890.

Three isolated high hills next received attention. In 1890 and 1891, a small secondary pumping station was erected at Evaline Street, pumping to a single tank at an elevation of 512 feet. This station and tank continued to supply the Garfield and Heberton Hill sections until 1914.

Again in 1895, a similar small pumping station and tank were installed to supply the Lincoln section. This Lincoln station was built at Park Avenue and Dearborne Street, while the tank was located near the eastern boundary line of the city at an elevation of 583 feet.

In 1897, a contract was awarded for the construction of Highland reservoir No. 2—the lower reservoir in Highland Park—at an elevation of 277 feet, with a capacity of 126,000,000 gallons. This reservoir, installed for the service of the low-lying sections along both rivers, for which the abandoned Brilliant Hill reservoir had been built, was finally completed, after many trials, in 1903.

The rapid development of the Squirrel Hill section forced the building of a new and larger Herron Hill pumping station at the corner of Center Avenue and Dithridge Street. This station was completed, and the old station abandoned in 1897.

In the latter part of the nineteenth century the contamination of the Allegheny River had reached such a stage that serious consideration of water purification became a matter of necessity. One of the first moves in this attempt to better the character of the water-supply was a combined meeting of the Engineers' Society of Western Pennsylvania, the Chamber of Commerce, the Allegheny County Medical Society, and the Iron City Microscopical Society, whose proceedings were published in 1894.

The citizens ranged themselves into three major groups—those in favor of the filtration of the existing supply; those who favored bringing water from distant uncontaminated sources; and those satisfied with existing conditions. Finally, by resolution of June 10, 1896,

Councils provided for the appointment of a Filtration Committee composed of the Mayor, the Presidents of Select and Common Councils, and eight representative citizens. Their report was submitted in January, 1899, and recommended the installation of a slow-sand filtration plant and the water-meter system. The issuing of the first of the so-called "filtration bonds" was approved by the people at an election held September 19, 1899. On the northern bank of the Allegheny River, east of Aspinwall and nearly opposite Brilliant station, the Pittsburgh filtration plant was started in 1905, after four years of intense argument, and after various designs, and redesigns. The first filtered water was delivered December 18, 1907. Additional filtered water was delivered to "peninsular" Pittsburgh as rapidly as individual filters could be completed, and on October 3, 1908, its entire supply was filtered.

The South Side received its first filtered water on February 4, 1909, and the North Side on March 29, 1914.

The filtration plant, as first constructed, consisted of a low-lift pumping station, known as Ross station, equipped with four centrifugal pumps each with a capacity of 35,000,000 gallons a day, a receiving basin, two sedimentation basins, 46 covered slow-sand filters, a filtered-water basin, and the necessary conduits and piping. There were later added to this plant 10 filters to meet the requirements of the North Side, and a contact baffle, or Reisler, pre-filtration system. This work was done in 1912 and 1913.

Due to the consolidation of Pittsburgh and Allegheny December 6, 1907, and to the purchase by the city of the water plant of the Monongahela Water Company in 1908, the three waterworks were merged at that time into a greater city waterworks.

NORTH SIDE

In 1847, Allegheny made its first definite steps to obtain a public waterworks. In that year a committee, consisting of Messrs. Riddle, Painter, Lothrop, Warner, and Alexander, was appointed and within two months reported that it had purchased seven acres of ground on Troy Hill, then in Reserve Township, for a reservoir site, and a lot of ground on Bank Lane, now River Avenue, for a pumping-station site. Council immediately approved the purchases, issuing the necessary bonds in payment, and further issuing $100,000 in bonds

with which to construct a waterworks. River Avenue pumping station and Troy Hill reservoir were first operated in 1849, and the cost of the complete waterworks to January 1, 1850, was $265,985.23. The original pumping-engines served in this station until a larger unit, a Lowry, was completed in 1874. This Lowry pumping-engine, together with two Allis pumping-engines installed in 1884, and two Wilson-Snyder pumping-engines installed in 1888, were in service at the time of the consolidation of the two cities in 1907.

In 1871 and 1872, a pumping station containing one small pump was built at the Troy Hill reservoir to supply the adjacent high territory.

The growth of the city into the northern hills made necessary the building of Howard Street pumping station, drawing its supply from the mains of the River Avenue system and pumping to a single tank on Nunnery Hill at an elevation of 502 feet. This work was completed in 1882, and a new engine was added in 1885, a new tank on Spring Hill in 1886, and another on Nunnery Hill in 1888.

Allegheny decided in the early 'nineties to go far outside the city limits to obtain a purer supply of water. Montrose pumping station, located on the Allegheny River near Hoboken, about nine miles from the center of the city, was constructed in 1896, and continued to supply the city until 1914, when, after the consolidation, Aspinwall pumping station took its place. The only other major plant development of the Allegheny waterworks prior to its consolidation with the Pittsburgh waterworks was the installation of Greentree station and tanks in 1904. This small station, located on Broadway, took its supply from the Lafayette system, and pumped to two small tanks at an elevation of 690 feet—the highest point within the present city of Pittsburgh, and located on Montana Hill, at the extreme northerly boundary of Allegheny.

SOUTH SIDE

The Monongahela Water Company served that portion of the city south of the Monongahela and Ohio rivers, as it existed prior to recent annexations. Its charter was dated 1855; however, it was 1865 before active work was started on its water plant. At this time a pumping station on the Monongahela River at South Twenty-ninth Street, and Birmingham reservoir at the head of South Thirtieth Street, were put in service. In 1875, a small pumping station was

constructed at Birmingham reservoir for the supply of the hill section. The first Allentown tank was installed in this system in 1895, and two additional tanks were built in 1904. These tanks are in Grandview Park, and at an elevation of 598 feet.

This Monongahela water plant was purchased by the city in 1908. With the exception of Allentown tanks, and the distribution mains, very little of the Monongahela Water Company plant, as purchased, is now in existence.

GREATER PITTSBURGH

With the consolidation of Pittsburgh and Allegheny in 1907, and the purchase of the Monongahela Water Company in 1908, the city faced the necessity of extending its filtered-water service to include the enlarged territory, and of consolidating three waterworks, separated by rivers, into one general system.

River Avenue station on the North Side was closed at once, and the supply from Montrose station was chlorinated, beginning in 1911.

On the South Side, soon after the purchase of the plant, water for the low-lying district was fed directly from Highland reservoir No. 2, and the South Twenty-ninth Street station, relieved of this service, took over the work of pumping water to the Allentown tanks, formerly done by Hill station. At this time Hill station and Birmingham reservoir were abandoned. Mission station, on Mission Street near South Eighteenth Street, was started in 1909 and placed in service November 12, 1912. This good example of a secondary pumping station replaced the antiquated South Twenty-ninth Street station, which was abandoned.

The building of Aspinwall station on filtration plant property, for the general supply of the North Side, was started in 1911, and water was first delivered from this station March 28, 1914. In this same system, Cabbage Hill, or North Side reservoir, was started in 1912, and completed in September 1914. This reservoir, with a capacity of 155,000,000 gallons, at an elevation identical with that of Highland reservoir No. 2, is located in Shaler Township, between the boroughs of Millvale and Etna. The opening of Cabbage Hill reservoir marked the passing of Troy Hill reservoir and Troy Hill pumping station. While Montrose station is held intact, it has not

operated since 1915. Garfield station and tanks finally gave up their duties in 1912, in favor of Herron Hill reservoir.

During the years of the World War and the subsequent period of reconstruction no important changes were made in the water plant. In 1926, provision was made for a large amount of work, most of which is uncompleted. It comprises a large number of pipe-line projects, particularly rising mains; the rehabilitation of Ross and Brilliant stations; the electrification of Howard and Herron Hill stations; the relining of Highland reservoir No. 2; and the building of two reservoirs in the high district of the North Side to replace the Montgomery, Lafayette, and Greentree tanks.

In 1828, one pump, its engine operated by steam from one boiler, served, through about 1½ miles of pipe and one reservoir, a city of about 10,000 people with raw river water at a maximum water pressure of about 34 pounds. The waterworks served a territory of about one-half of a square mile in extent. Now, at the end of a century of successful operation, the Pittsburgh waterworks serves 37 square miles of territory, a population of 590,000, with a daily average of 118,076,000 gallons of filtered water at an average pressure of 79 pounds. Its plant valuation on a used and useful historical basis is about $34,500,000, and its reproduction valuation is about $65,000,000.

Listing only the major items, its plant consists of a slow-sand filtration plant with a capacity of 168,000,000 gallons a day; a low-lift pumping station equipped with five pumps of a combined capacity of 255,000,000 gallons a day; two primary pumping stations equipped with 13 pumps of a combined capacity of 196,000,000 gallons a day; four secondary and one tertiary pumping stations equipped with 16 pumps of a combined capacity of 69,000,000 gallons a day; a filtered water reservoir, storing 50,000,000 gallons; five reservoirs and 12 tanks, storing in the distribution system 413,000,000 gallons; 13.65 miles of rising mains, eight inches to 96 inches in diameter; 812.28 miles of distribution mains, four inches to 66 inches in diameter; 18,993 distribution valves; 7483 fire hydrants; 105,382 water services; and 44,475 water-meters.

DISCUSSION

J. P. LEAF:* It is wonderful to see how the death rate has gone down. While we always take typhoid fever as the index, we do not know how many other diseases have been brought in by the same conditions, and these figures do show improvement in the case of other diseases as well as typhoid fever.

In 1824 the members of the Economite Society moved into a new location at Economy, Pa. They were located on a gravel bank without water and they brought their water from springs up on the hill. In 1915 we were putting in some sewers through a low place and ran into some of their old water line and recognized their old pipe-line and took out a piece and took it to Mr. Duss, and we also sent a piece to the Carnegie Museum. In a few days Mr. Rapp sent us a letter describing the laying of this line. It was written in German, so I did not bring it along because I could not read it. But what he said was something like this, that they had piped a spring down into the town by taking white-oak logs eight to ten feet long, boring 2½-inch holes through them, and putting those logs together with iron ferrules about 2½ inches long and three or four inches wide. The logs with the ferrule connections were driven together with a heavy maul. That water line existed and supplied Economy with water from 1824 to about 1900. Then they put in a pumping plant and dug a well to the underflow, and at Ambridge they built a water-works and used that same underflow; so that the borough of Economy has been using that conduit since 1824.

I have here a piece of one of the logs, taken from the end and showing the joint. I have the other piece and it is so hard I could not saw it, so I did not bring it; but you can readily understand from this how the joint was made. This was in good condition when I got it, but after I took it out of the ground it dried out and cracked. The ferrule was also in good condition when found, but it has rusted since. It is a piece of 1/32-inch iron sharpened to a knife-edge on either side, with a narrow rim shrunk around it. This was put between the logs when they were laid and the logs were driven together with a heavy maul. I found a place where they made a tap by taking an auger and boring a hole through the log and putting a pipe in.

*City Engineer and Consulting Engineer, Rochester, Pa.

J. N. CHESTER:* Did that supply the reservoirs, or were those reservoirs built after the pumping plant was put in?

J. P. LEAF: No; it was simply from the spring. The letter I mentioned stated that the original spring water head had a flow about the cross-section of a rye-straw and they had to go to several other springs and connect up enough of them to supply the town all the time. I would be glad to furnish a copy of that letter if anybody can read it.

J. N. CHESTER: How long was it in service before it was exposed?

J. P. LEAF: I dug this out in 1915. They had been using the water for 76 years, up to 1900.

J. N. CHESTER: Then 13 years of exposure to the atmosphere has been more severe on it than 91 years in the ground.

J. P. LEAF: This was in a swamp; but, with the water inside, it was well preserved. The length dug up was probably 25 or 30 feet, and when I discovered what it was I got what I wanted and other people took the rest.

J. N. CHESTER: These same Economites built another works in Leetsdale, and Mr. Leaf referred to the reservoir they built on top of the hill, at Economy, of stone and concrete. They are in a pretty good state of preservation yet, both at Leetsdale and at Economy. I now have to do with the one at Leetsdale. That reservoir is fed from a spring on top of the hill and it is still flowing, not to that reservoir but into the system of the Edgeworth Water Company, about five gallons a minute; but the pipe leading down the hill and into Leetsdale is probably four or five blocks long after it reaches the bottom of the hill. When I became associated with that waterworks some fifteen years ago I tried to trace the history and it was guaranteed to me by one of the old citizens who lived there that it had been in at least fifty years, now about sixty-five years of service, for a six-inch,

*J. N. Chester Engineers, Pittsburgh.

wrought-iron pipe, working at a pressure not over 100 pounds to the square inch. That may be a sort of guide to you fellows who want to know the life of a wrought-iron pipe, yet you must consider the quality of the pipe. I have seen pipe made in later years that has been in service less than 10 years that is not in as good condition to-day as this one.

That we may not get away from the subject of the paper, I want to express my appreciation of this very interesting description of the Pittsburgh water-works. To me the more familiar I become with it the more it excites my admiration. Many times I have wished that the citizens themselves could appreciate the plant that we have in this city. We hear of the city built on seven hills, and I noticed a paper recently by some lady stating that Pittsburgh was built not on seven hills but on seventy-seven hills.

I had nine pumping stations in mind. With those nine pumping stations and as many hills as there are, and with the series of reservoirs and tanks, I feel sure that the citizens of Pittsburgh do not realize what a job it is and what careful attention it requires for constant maintenance of the pressure at the spigot in all their houses. That is, of course, but one of the problems for the waterworks man.

The reason I mention this is that to my mind the citizens never think of the cares of their public servants. We often see the lights go out in our houses. On the other hand, we always expect the water pressure to be available and, as far as my experience has gone in Pittsburgh, we have always had that water at the spigot. That doesn't just happen. It is there because such men as Mr. Lanpher and his assistants are always on the job.

I want to mention especially the phase of this work which is under the direct care of Mr. Drake. I was exceedingly interested in his figures and diagrams, some of which I had seen before, but many of which I had not. He has shown the progress that is being made there with regard to the death rate; and, again, that does not just happen. It results because the men are on the job. Not only are they on the job, but they are living their job. I suppose you would find that those fellows would talk shop. Recently I read an article by our famous Mr. Ford, who said that the man who did not live his job, who did not talk shop, really was not the man for that job. Now, it is true in my experience that these faithful servants of the Pittsburgh

Water Department are living their jobs and I have found that they talk shop, and I think the people of Pittsburgh should feel quite safe and should highly compliment themselves that they have men of this caliber running this department.

I have very great pleasure in moving a vote of thanks to these gentlemen for these very interesting papers.

G. E. Flanagan:* I should like to ask the author of the paper several questions which appear to be of general interest. There is an impression that what is now Lake Carnegie was originally a half-way station for pumping from the river up to the Highland reservoir in two stages. If that was the intention, I know it was never carried out. Secondly, a word as to the nature of the conduits taking the water across the river from Aspinwall to the city and on over to the South Side. Are these conduits laid on the river bottom, or buried beneath it? Third, I remember that the reservoir at Bedford Avenue used to have a pumping station there with what seemed to be a long-stroke pump. I would like to ask if water was pumped from the Bedford Avenue reservoir to some higher site.

Then, I would like to say, as to the remarks of the last speaker, that we are all so used to the wonderful water service we get that we seem to take everything of that kind for granted the same as the rainfall and the sunshine. The service is so constant and so good that we take it as we do the gifts of nature, and we never stop to think of what is required to work it out.

E. E. Lanpher: As the two reservoirs, Highland and Brilliant Hill, were nearing completion, considerable discussion was recorded as to the scheme of pumping to them. The work at Brilliant station and each of the two reservoirs had been carried on by separate forces, with little, if any, co-ordination. The result was that the city found itself with Brilliant pumping station equipped with pumping-engines designed for pumping to the Highland reservoir and with no units for pumping to the lower or Brilliant Hill reservoir.

Numerous schemes were suggested to meet the situation. The most promising were (1) to install low-lift pumps at Brilliant to pump to Brilliant Hill reservoir; (2) to pump all water to Brilliant

*Mechanical Engineer, Heyl & Patterson, Inc., Pittsburgh.

Hill reservoir and install at this reservoir pumps to lift to Highland reservoir such water as was required for that higher service; (3) to pump all water to Highland reservoir, by-passing the water required for Brilliant Hill service; (4) to abandon Brilliant Hill reservoir. Any scheme except (4) required an immediate investment for pumping equipment and this, coupled with the fact that Brilliant Hill reservoir and the old "lower basin" at Prospect Street were at practically the same elevation, appears to have determined the abandoning of Brilliant Hill reservoir.

As to the second question. At the so-called "upper works," at Prospect Street—what we now know as Washington Park—a pump was installed and put in service in 1850, pumping water from the "lower basin" to the "upper basin"—now known as Bedford reservoir—and this pump continued until 1893, long after Highland reservoir was put in service.

I remember a peculiar statement appearing in the annual report of 1873, as an argument for the purchase of an additional pumping-engine for this station. It was to the effect that the old engine installed in 1850 was very expensive to operate because it took two strokes of the steam piston to one of the water piston and therefore used twice as much steam as it should. That was written by a very competent superintendent. He obtained the desired engine at once and later obtained another.

A question was asked in regard to the Brilliant suction. Brilliant suction consists of two riveted steel mains, 72 inches in diameter, incased in concrete in the bottom of the river. The river crossing between Highland No. 2 and the North Side systems at Twenty-sixth street is a single riveted steel main, 48 inches in diameter, flanged in 120-foot sections and laid by the diver method in the bottom of the river.

W. C. Hawley:* I have very little to say. I think Pittsburgh is to be congratulated in having the organization which it has in the Bureau of Water and in keeping in office continuously such a competent group of men. I think the people of Pittsburgh do not realize, and I doubt if many engineers realize, the extreme difficulty of water service in this district—the great differences in pressure under which

*Chief Engineer and General Superintendent, Pennsylvania Water Co., Edgewood, Pa.

water is served and, of course, the difficulties encountered in the rivers and in reaching parts of the district to be served. I think Mr. Drake is to be congratulated on the splendid results which have been obtained in the operation of the filter plant under his direction. I confess I am surprised that there is so little typhoid left in this district, because typhoid is not altogether a water-borne disease. I have noticed that in the last five years we have had fewer local epidemics due to milk and due to polluted springs and wells. Of course we do have occasional cases of people who get the infection while bathing in the river. There is not as much of that as there was. Typhoid has been pretty well wiped out in this district.

I should like to ask Mr. Lanpher if, in looking over the records, he has discovered who was responsible for the adoption of the standard by which fire hydrants are opened by turning to the right.

E. E. Lanpher: That was William Atkinson. On a map in his report of 1868 he recorded very carefully two valves that opened the right way in the system as against all the rest that opened the wrong way.

Our main need from the standpoint of waterworks management is a proper method of accounting. The operation of such a large public utility under present accounting methods imposes an unfair burden on the management. I assure you that I can not determine from the records of accountants or auditors the cost of any function of the waterworks. Such functional cost records as we have have been obtained by the better grade of engineers, working overtime and outside their regular duties.

Our greatest problem of the near future relates to the safety or reliability of the plant, and whether it is better policy to enlarge present important facilities or to install parallel facilities even to the extent of duplication. Other cities, faced with the necessity of largely increasing their plants (Cleveland and Detroit in particular) have found it profitable to install duplicate primary works in widely separated locations, either of which would carry the load for a considerable time. This policy, regardless of the high cost, is probably warranted due to the added reliability of the water plant.

In Pittsburgh we rely upon single units in our primary works—one single low-lift station, one filtration plant, and while there are

two primary high-lift stations their work can be duplicated in only a minor degree. This is emphasized at present by the threatened failure of the sole suction main leading from the river to Ross station. We are now spending over $300,000 under an emergency contract in duplicating this suction main. There is only one rising main, a 96-inch, steel, concrete-incased main, running from Ross station to the filter plant. There is only one filtered-water conduit running from the filters to the filtered-water reservoir and only one filtered-water reservoir. It will cost more than $2,000,000 to duplicate these few items, and the wisdom of duplicating such portions of the plant rather than build a duplicate plant is doubtful. It is not so many years since cities expected to be out of water once in a while. That time has passed.

Funds are now available for the building of a duplicate river crossing main under the Monongahela River. Funds are also available for the rehabilitation of Brilliant pumping station. Mr. Shaw's paper before this Society a year ago* dealt with the economic questions involved at this station. Here is an antiquated station with pits 60 feet deep, built for the installation of vertical pumping-engines. Its development with centrifugal pumps driven either by steam or electricity is a very difficult and unsatisfactory matter. The policy to be followed has not been finally determined; it is possible that an entirely new station will prove to be the most economical solution. However, of all our needs and problems, those mentioned and many more, I say unhesitatingly that the most pressing is a real functional accounting system. This need is not peculiar to Pittsburgh; it applies to practically every city with which I am familiar. It is true that most governmental accounting accomplishes mainly the concealment of pertinent facts.

W. C. Hawley: May I add just a word. There is a prevailing impression among people in Pittsburgh that there is something about the water—some chemical action—that affects its use, and I am glad Mr. Drake stated just what is done. Only last night, in this room, a well-known attorney in Pittsburgh told me that the water killed the grass. A great many people believe that, and I think we engineers should do what we can to correct that impression.

*Proceedings, March 1928.

STATISTICS OF TYPHOID FEVER IN PITTSBURGH*

By C. F. Drake†

The article by James Otis Handy in the Proceedings of the Engineers' Society of Western Pennsylvania, April 1927, admirably covers the early history of efforts to establish water purification in Pittsburgh. It would seem, however, that one additional fact should have been included in Mr. Handy's paper. On October 25, 1847, James H. Laning, of Cincinnati, appeared before Pittsburgh Common Council, proposing filtration of the public water-supply of Pittsburgh.

The present paper will be confined to vital statistics, showing the incidence of typhoid fever in Pittsburgh during the past 55 years, so far as statistics are available.

In 1873, the typhoid fever death rate of Pittsburgh was 143.6 per 100,000 inhabitants. The population was 133,000, and the typhoid deaths were 191.

In 1907, the typhoid fever death rate of Pittsburgh, including Allegheny, was 121.1 per 100,000 inhabitants. The combined population was 535,330, and the total typhoid deaths were 648. Excluding Allegheny, the rate was 125.2 per 100,000 inhabitants.

In 1927, the typhoid fever death rate was 1.8 per 100,000 inhabitants. The population was 665,500, and the total typhoid deaths were 12.

These rates include the deaths of non-inhabitants in hospitals.

In 1900, there were 3341 typhoid cases in Pittsburgh proper and South Side. This gives a case rate of 1038.8 per 100,000 inhabitants.

In 1907, there were 5652 typhoid fever cases in Pittsburgh, including Allegheny. With a combined population of 535,330, the typhoid case rate in 1907 was 1055.9 per 100,000 inhabitants. Excluding Allegheny, the rate was 1119.2 per 100,000 inhabitants.

In 1927, there were 78 typhoid fever cases in Pittsburgh. With a population of 665,500, the typhoid case rate in 1927 was 11.7 per 100,000 inhabitants. Non-inhabitants in hospitals are included. The resident typhoid case rate in 1927 was 8.3 per 100,000 inhabitants, with 55 resident typhoid cases. While the typhoid death rate, including non-inhabitants in hospitals, was 1.8 per 100,000 inhabitants in

*Presented May 1, 1928. Received for publication October 5, 1928.

†Superintendent, Filtration Division, Bureau of Water of the City of Pittsburgh, Pittsburgh.

1927, the resident typhoid death rate, excluding non-inhabitants in hospitals, was only 1.5 per 100,000 inhabitants.

Table I shows the resident and non-resident deaths from various causes, in Pittsburgh, during 1926. This table shows that only 52.9

TABLE I. RELATION OF RESIDENT TO TOTAL DEATHS FROM VARIOUS CAUSES

	Resident deaths	Non-residents in hospitals	Total deaths	Per cent.
Typhoid fever	9	8	17	52.9
Cerebro-spinal fever	9	5	14	64.3
Violence	573	204	777	73.7
Scarlet fever	13	4	17	76.5
Tuberculosis, all forms	416	86	502	80.0
Erysipelas	13	3	16	81.2
Cancer, malignant tumor	566	131	697	81.2
Diabetes mellitus	96	19	115	83.5
All causes	7507	1436	8943	83.9
Nephritis, acute and chronic	488	83	571	85.5
Lobar pneumonia	732	109	841	87.0
Diphtheria	52	7	59	88.1
Organic heart diseases	1035	134	1169	88.5
Pulmonary tuberculosis	350	44	394	88.8
Broncho-pneumonia	372	42	414	89.9
Apoplexy	481	39	520	92.5
Diarrhea, under two years	222	17	239	92.9
Whooping-cough	106	7	113	93.8
Diarrhea, over two years	26	1	27	96.3
Influenza	215	7	222	96.8
Measles	25	0	25	100.0

per cent. of the typhoid deaths reported in Pittsburgh, in 1926, were those of actual residents of the city. The table further shows that from 80 to 100 per cent. of the deaths from many other causes were those of residents of Pittsburgh.

Table II shows typhoid death rates per 100,000 inhabitants, from 1900 to 1927, in Pittsburgh; in Pennsylvania; in the United States Registration Area; and in 56 large American cities not including Pittsburgh.

Beginning with 1908, the North Side (formerly Allegheny) is included. Earlier figures are for Pittsburgh, including the South Side.

In Pittsburgh, in 1873, typhoid fever caused 5.43 per cent. of the deaths from all causes; in 1907, the figures were 6.84 per cent.,

TABLE II. TYPHOID DEATH RATES PER 100,000 INHABITANTS

Year	Pittsburgh Resident	Pittsburgh Total	Pennsylvania	U. S. Registration Area	56 large American cities
1900	120	144.6		35.9	28.37
1901	102	125.3		32.5	30.00
1902	109	133.8		34.4	32.89
1903	108	134.2		34.2	35.45
1904	122	142.1		31.7	30.97
1905	89	98.8		27.8	27.06
1906	110	130.3	56.5	31.4	29.18
1907	106.6	125.2	50.3	29.3	30.88
1908	42.6	48.7	34.3	24.4	22.19
1909	17.4	24.6	22.7	21.2	17.61
1910	21.7	27.9	24.6	23.5	19.38
1911	20.0	25.9	22.0	21.0	15.42
1912	8.1	12.8	16.6	16.5	12.45
1913	10.5	19.6	18.3	17.9	12.60
1914	8.4	15.4	13.2	15.5	10.26
1915	6.6	10.5	12.6	12.4	9.67
1916	5.5	8.6	13.9	13.3	7.59
1917	7.7	11.5	10.7	13.5	6.53
1918	6.2	10.0	10.9	12.6	6.15
1919	3.9	6.3	7.1	9.2	3.81
1920	2.7	5.2	5.7	7.8	3.48
1921	3.0	4.1	7.4	9.0	3.68
1922	3.3	4.9	4.7	7.5	3.12
1923	2.1	3.7	4.9	6.8	3.09
1924	2.6	4.2	3.9	6.7	3.05
1925	1.3	3.0	4.8	8.0	3.45
1926	1.4	2.7	3.7	6.5	2.80
1927	1.5	1.8	2.7		

and in 1927, 0.13 per cent. The figures for 1907 do not include Allegheny.

Table III shows the total typhoid fever deaths, by months, from 1873 through 1927, in Pittsburgh, including non-residents in hospitals.

Table IV shows the total typhoid fever cases, by months, from 1888 through 1927, in Pittsburgh, with non-residents in hospitals included.

TABLE III. DEATHS FROM TYPHOID FEVER, INCLUDING NON-RESIDENTS IN INSTITUTIONS

Year	Population	Jan.	Feb.	Mar.	Apr.	May	June	July	Aug.	Sept.	Oct.	Nov.	Dec.	Total	Per 100,000
1873	133,000	9	9	7	16	34	15	15	28	18	18	15	7	191	143.6
1874	137,000	15	15	15	5	3	2	7	11	9	30	12	25	149	108.8
1875	140,000	13	5	12	4	8	4	6	12	18	20	12	6	120	86.4
1876	142,000	11	5	9	13	4	4	0	8	11	7	7	5	84	59.2
1877	145,000	5	3	0	6	4	2	4	6	8	15	9	9	71	49.0
1878	145,000	11	9	3	7	11	8	11	16	13	13	8	5	115	79.3
1879	150,000	8	6	10	4	3	1	3	7	15	12	14	8	91	60.7
1880	156,381	7	21	20	62	12	8	16	9	22	14	10	10	211	134.9
1881	165,000	11	10	9	20	12	6	25	34	37	39	26	19	248	150.3
1882	170,000	27	23	9	8	6	6	17	33	32	32	37	38	268	157.7
1883	175,000	38	26	25	5	7	5	8	18	17	13	10	16	188	107.4
1884	185,000	9	11	8	5	9	3	3	12	22	18	14	16	130	70.3
1885	202,559	11	5	6	6	14	6	18	22	27	14	17	8	154	76.0
1886	205,000	7	5	4	1	7	6	12	42	11	25	8	12	140	68.3
1887	210,000	10	8	14	8	14	13	22	33	35	32	28	52	269	128.1
1888	220,000	17	8	10	4	7	6	15	28	33	24	19	20	191	86.8
1889	230,000	12	7	8	7	4	10	24	34	38	30	21	23	218	94.8
1890	238,617	18	34	18	17	20	16	37	36	37	19	33	30	315	132.0
1891	247,000	27	15	22	13	17	11	23	36	33	25	20	7	249	100.8
1892	255,000	26	30	13	10	18	18	29	22	32	23	17	18	256	100.4
1893	265,000	16	13	36	20	25	23	25	47	31	21	22	13	292	110.6
1894	272,000	13	9	10	4	8	12	12	12	22	17	14	19	152	55.9
1895	275,000	34	18	6	15	9	8	9	22	17	32	24	19	213	77.4
1896	282,500	17	23	20	7	13	9	9	17	17	11	17	15	175	61.9
1897	287,500	16	15	12	16	13	10	10	16	25	18	9	24	184	64.0
1898	298,772	19	24	12	18	18	14	13	20	18	20	15	27	218	72.9
1899	306,115	31	22	22	25	21	15	21	44	38	33	31	39	342	111.7
1900	321,616	50	56	51	54	24	12	22	46	50	27	29	44	465	144.6

1901	332,000	38	35	37	33	41	24	42	52	30	40	22	22	416	125.3
1902	346,000	42	27	32	46	38	49	27	50	45	42	44	21	463	133.8
1903	354,000	42	32	46	53	49	31	33	41	30	21	41	56	475	134.2
1904	354,000	59	51	47	51	40	44	56	40	38	26	26	25	503	142.1
1905	372,500	16	21	14	20	24	22	40	37	35	33	46	60	368	98.8
1906	390,000	48	33	49	78	51	46	27	33	29	34	36	44	508	130.3
1907*	403,330	47	31	37	26	41	48	31	48	40	47	45	64	505	125.2
1908†	521,187	63	42	21	22	14	12	13	10	20	8	9	20	254	48.7
1909	528,286	5	15	8	8	11	6	8	10	11	17	13	11	130	24.6
1910	533,905	7	11	19	12	10	10	8	15	13	17	10	17	149	27.8
1911	539,602	16	16	12	7	4	12	8	11	14	8	20	12	140	25.9
1912	545,299	6	8	10	5	6	5	6	7	6	7	3	1	70	12.8
1913	550,996	7	6	8	5	8	5	8	13	19	10	4	15	108	19.6
1914	556,693	6	8	8	5	4	8	6	8	6	10	7	10	86	15.4
1915	562,390	5	5	5	3	5	4	4	2	8	5	8	5	59	10.5
1916	568,087	9	9	1	0	1	3	3	4	5	6	6	2	49	8.6
1917	573,784	8	5	1	1	6	3	8	8	13	8	4	1	66	11.5
1918	579,481	4	6	7	8	6	3	4	6	6	7	0	1	58	10.0
1919	585,178	1	3	1	2	4	0	2	11	4	8	1	0	37	6.3
1920	591,033	1	5	1	1	1	4	2	4	7	2	2	1	31	5.2
1921	602,452	2	1	0	0	1	0	4	2	5	4	5	1	25	4.1
1922	607,902	2	1	0	1	1	5	2	6	1	6	1	4	30	4.9
1923	613,442	3	1	1	0	2	2	2	3	3	3	2	1	23	3.7
1924	625,919	1	2	0	1	0	1	2	3	2	4	3	7	26	4.2
1925	631,563	2	1	1	2	0	1	1	4	0	0	7	0	19	3.0
1926	637,000	1	1	1	0	0	0	0	0	2	5	5	2	17	2.7
1927	665,500	1‡	0	0	1	1	0	1	3	1	2	1	1	12	1.8

*First filter started, December 11, 1907. All filtered water to "Peninsular" Pittsburgh in October 1908. Filtered water to South Side in February 1909. Filtered water to North Side in March 1914.

†Including North Side typhoid statistics, starting January 1908.

‡A resident of Sharpsburg died in a Pittsburgh hospital in December 1926. We included this death in 1926, but Pittsburgh Department of Public Health included it in January 1927, thus recording two deaths in that month.

TABLE IV. TYPHOID FEVER CASES, INCLUDING NON-RESIDENTS IN INSTITUTIONS

First filter started December 11, 1907. North Side included, starting 1908.

Year	Population	Jan.	Feb.	Mar.	Apr.	May.	June	July	Aug.	Sept.	Oct.	Nov.	Dec.	Total	Per 100,000
1888	220,000	139	52	23	19	26	31	110	199	165	119	59	85	1027	466.8
1889	230,000	33	34	63	34	35	49	154	238	203	133	100	135	1211	526.5
1890	238,617	86	157	86	73	85	74	163	190	191	147	170	139	1561	654.3
1891	247,000	171	82	78	45	36	69	78	169	146	146	56	73	1149	465.2
1892	255,000	123	104	78	59	121	87	101	188	161	144	93	112	1371	537.6
1893	264,000	151	54	219	171	193	153	238	419	312	255	160	73	2398	908.3
1894	272,000	95	63	51	62	47	34	81	201	150	205	98	145	1232	452.9
1895	275,000	227	116	66	107	94	50	123	228	222	232	148	124	1737	631.6
1896	282,500	123	120	82	56	74	59	93	213	159	109	131	130	1349	477.5
1897	287,500	99	64	78	71	70	65	100	178	237	130	103	213	1408	489.7
1898	298,772	180	196	99	161	111	124	175	233	209	101	127	202	1918	641.9
1899	306,115	160	76	118	197	143	92	210	362	266	218	211	320	2373	775.2
1900	321,616	383	303	306	213	144	80	291	539	284	257	191	250	3341	1038.8
1901	332,000	243	205	154	252	262	243	416	572	349	320	177	219	3412	1027.7
1902	346,000	380	130	212	233	339	334	301	467	334	204	229	201	3364	972.3
1903	354,000	274	147	304	392	313	175	349	355	275	217	301	547	3649	1030.8
1904	354,000	406	380	227	207	217	193	348	328	237	201	176	180	3100	875.7
1905	372,500	183	126	98	111	176	234	325	342	287	297	382	407	2969	796.8
1906	390,000	328	306	429	820	394	328	420	506	506	675	455	563	5730	1469.2
1907	403,330	567	298	165	199	312	508	332	397	332	440	511	453	4514	1119.2
1908	521,187	434	201	118	134	113	142	119	164	127	96	96	89	1833	351.6
1909	528,286	89	98	82	51	65	52	69	94	99	93	87	76	955	180.7
1910	533,905	43	49	59	65	62	51	83	117	197	117	71	84	998	186.9
1911	539,602	86	54	65	42	51	48	30	81	84	74	85	86	768	142.3

1912	545,299	37	23	32	18	35	30	38	64	38	67	26	23	431	79.0
1913	550,996	27	20	24	38	32	47	64	99	109	53	36	38	587	106.5
1914	556,693	27	27	20	19	20	18	44	51	57	42	37	25	387	69.5
1915	562,390	52	37	14	10	18	20	10	28	53	51	25	45	363	64.5
1916	568,087	25	15	14	5	18	22	35	46	41	15	14	25	274	48.2
1917	573,784	13	16	13	17	28	17	29	59	57	31	14	8	302	52.6
1918	579,481	11	22	16	17	10	10	19	26	41	20	3	5	200	34.5
1919	585,178	6	5	3	3	4	5	17	20	20	23	6	7	119	19.6
1920	591,033	7	5	3	9	4	12	9	13	19	8	6	10	105	17.8
1921	602,452	4	2	5	3	7	5	33	81	113	31	11	7	302*	50.1
1922	607,902	4	2	2	5	6	15	27	24	27	31	6	8	157	25.8
1923	613,442	7	3	0	7	4	15	18	11	20	15	7	3	110	17.9
1924	625,919	10	7	3	3	4	4	14	10	14	11	7	21	108	17.3
1925	631,563	15	2	5	4	6	4	11	14	16	12	13	4	106	16.8
1926	637,000	5	2	3	3	6	2	2	6	28	22	13	6	98	15.4
1927	665,500	3	2	5	2	7	0	12	19	16	5	3	4	78	11.7

*Epidemic Four Mile Run district, due to spring water and privies.

Table V shows the resident typhoid deaths in Pittsburgh, including South Side and North Side, by years from 1907 through 1927.

TABLE V. RESIDENT TYPHOID DEATHS IN PITTSBURGH

Includes all typhoid deaths except those of non-residents brought to hospitals in Pittsburgh after contracting typhoid.

Year	"Peninsula"	South Side	North Side	Not stated	Total
1907	373	57	143	0	573
1908	128	33	60	1	222
1909	36	15	41	0	92
1910	43	10	63	0	116
1911	33	13	61	1	108
1912	17	12	15	0	44
1913	27	15	15	1	58
1914	22	7	18	0	47
1915	21	3	13	0	37
1916	16	9	5	1	31
1917	21	5	17	1	44
1918	18	5	13	0	36
1919	10	3	10	0	23
1920	7	6	3	0	16
1921	13	0	5	0	18
1922	12	2	6	0	20
1923	7	2	4	0	13
1924	7	6	3	0	16
1925	6	0	2	0	8
1926	7	2	0	0	9
1927	6	2	2	0	10

Table VI shows the resident typhoid cases in Pittsburgh, including South Side and North Side, from 1907 through 1927.

Weekly health reports of the United States Public Health Service show that there were 3879 typhoid cases reported, in 1927, by 57 large American cities with a total population of approximately 29,000,000. This is at the rate of 13.4 per 100,000 inhabitants.

Table VII shows that Pittsburgh (excluding South Side and North Side) with a population of approximately 290,000 reported 3877 resident typhoid cases in 1907, or 1377 per 100,000 inhabitants. In 1927, Pittsburgh had 55 resident typhoid cases, or 8.3 per 100,000 inhabitants—much below the average of 57 large American cities.

Very few American cities of over 100,000 population record entire absence of typhoid fever deaths in any single calendar year; yet

TABLE VI. RESIDENT TYPHOID CASES IN PITTSBURGH

Includes all typhoid cases except those of non-residents brought to hospitals in Pittsburgh after contracting typhoid.

Year	"Peninsula"	South Side	North Side	Not stated	Total
1907	3877	406	850	0	5133
1908	1082	270	363	8	1723
1909	326	131	297	1	755
1910	295	97	435	4	831
1911	196	76	373	1	646
1912	145	81	108	1	335
1913	245	106	108	1	460
1914	148	62	66	1	277
1915	146	50	63	3	262
1916	135	42	41	1	219
1917	111	39	111*	1	262
1918	97	24	26	0	147
1919	55	14	23	0	92
1920	46	18	12	0	76
1921	191†	39‡	22	0	252
1922	55	26	31	0	112
1923	57	10	14	0	81
1924	55	15	12	0	82
1925	44	13	12	0	69
1926	38	9	12	0	59
1927	33	15	7	0	55

*Contamination by open cross connection.
†Due largely to sanitary conditions in Four Mile Run.
‡Due to spring water, Arlington Avenue.

the South Side, with a population of approximately 136,000, had no resident typhoid fever death from November 10, 1924, to October 3, 1926—a period of approximately 23 consecutive months—and the North Side, with a population of approximately 146,000 in 1925, had no resident typhoid fever death from March 12, 1925 to September 25, 1927—a period of approximately 30 consecutive months. Thus far in 1928 there has not been any resident typhoid death in Pittsburgh. The North Side had one resident typhoid case during the first four months of 1928.

TABLE VII. TYPHOID DEATHS IN PITTSBURGH AND ALLEGHENY, INCLUDING NON-RESIDENTS IN INSTITUTIONS

Year	Allegheny	Pittsburgh	Total	Population	Per 100,000
1900	121	465	586	452,000	129.7
1901	135	416	551	459,000	119.3
1902	149	463	612	466,000	129.6
1903	146	475	621	474,000	128.3
1904	169	503	672	481,000	138.6
1905	182	368	550	491,000	109.2
1906	198	508	706	500,000	135.5
1907	143	505	648	511,000	121.1
1908			254	520,000	48.7
1909			130	527,000	24.6
1910			149	534,000	27.8
1911			140	542,000	25.9
1912			70	549,000	12.8
1913			108	551,000	19.6
1914			86	557,000	15.4
1915			59	562,000	10.5
1916			49	568,000	8.6
1917			66	574,000	11.5
1918			58	579,000	10.0
1919			37	585,000	6.3
1920			31	591,000	5.2
1921			25	602,000	4.1
1922			30	608,000	4.9
1923			23	613,000	3.7
1924			26	626,000	4.2
1925			19	632,000	3.0
1926			17	637,000	2.7
1927			12	666,000	1.8

DISCUSSION

G. E. Flanagan:* I want to ask if the wonderful improvement in typhoid statistics is due solely to filtration, or is it also due to chemical treatment of the water?

C. F. Drake: The question was asked as to the reduction of typhoid fever in Pittsburgh being due to filtration, to coagulation, or to chlorination. We use no coagulant in treating the water at Aspin-

*Mechanical Engineer, Heyl & Patterson, Inc., Pittsburgh.

wall. We have never used any, although we have had river turbidities as high as 5600 parts per million. During times of very turbid river water there is a removal of approximately 2½ pounds of mud a day for every consumer of water in Pittsburgh. At times of acid river water, soda-ash is used to neutralize before filtration.

In general, we use about one pound of liquid chlorin per million gallons of water treated after filtration. Practically all progressive water purification plants in this country now use liquid chlorin or hypochlorite to protect public health to the highest known degree. As the chlorin content of the Allegheny River is in the vicinity of 17 parts per million, the introduction of one part in eight million, in the form of liquid chlorin, is chemically of little consequence. Chicago, with lake turbidities frequently ranging as high as 100 parts per million, is said to apply approximately six pounds of chlorin per million gallons of water treated.

There are no figures available to show the relative efficiency of filtration or chlorination in reducing typhoid in Pittsburgh. With a turbidity as high as that developed in the Allegheny River, however, it would be unwise to attempt to produce a safe drinking water by chlorination alone during the entire year. Our results show that filtration causes a very marked reduction of bacteria before the chlorin is actually applied to the water.

Unless we go into an involved discussion of bacterial counts, that is about as well as I can answer the question.

BOARD OF DIRECTION

The regular monthly meeting of the Board of Direction of the Engineers' Society of Western Pennsylvania was held in the William Penn Hotel, Tuesday, January 17, at 4:10 P. M., President George T. Ladd presiding, Messrs. Hunter, Clifford, Edgar, Eavenson, Covell, Fohl, Spellmire, Davis, Johnston, Lesher, McLoughlin and the Secretary being present, and Messrs. Chester, Stucki, Affelder, Fieldner, Goodwin, Fulton and Bayne being absent.

The minutes of the last meeting, held December 13, were approved without reading.

Applications for membership from the following gentlemen, having been published to the Society, pursuant to the action of the Board, were elected to membership:

MEMBERS

Chesterman, F. J.
Frank, Robert J.
Staege, Stephen A.
Purcell, Thomas Edward
Wessel, A. H.
Wohlgemuth, M. J.

ASSOCIATE MEMBER

Steuber, M. C.

ASSOCIATE

Cook, R. J.

JUNIOR

Griggs, Thomas Newell

Applications from the following gentlemen were received and their names ordered published to the Society. Assignment to the various grades of membership is as follows:

MEMBERS

Brady, Hugh S.
Francis, Charles B.
Keller, John Donald
Quinn, Robert S.

ASSOCIATE MEMBER

Rice, William E.

Letters of resignation were received from the following and, after discussion, they were ordered accepted:

Bain, G. F.
Entwisle, E. B.
King, Thomson
Keller, J. B.
Knaell, K. K.
Matthews, C. N.
Stearns, K. T.
Strickler, E. V.
Whyte, Clifford R.

The Secretary reported the death of R. T. McCormick, who joined the Society in April, 1906, and died December 7, 1927; also B. F. Jones, who joined February, 1921, and died January 1, 1928, and W. P. Palmer, who joined November, 1888, and died December 17, 1927.

The report of the Secretary, showing the financial condition of the Society at the close of business December 31, 1927, having been audited by the Finance Committee, was approved.

Mr. Clifford, chairman of the Entertainment Committee, reported that the seats for the banquet were entirely sold out and that we were to have the largest dinner in the history of the Society.

Mr. Covell, chairman of the House Committee, reported an attendance in the evening for the year of 4780, an increase of 407 over the previous year.

The committee also recommended the purchase of an adding machine for use in the office, which recommendation was concurred in by the Board of Direction.

The committee discussed the question of adequate regulation of temperature and ventilation of the rooms occupied by the Society, taking the matter up with our Secretary, Mr. Treschow, and with the engineer in charge of the hotel. The attention of the committee was called to the fact that the temperature of the club rooms was frequently too high for comfort, and that there was a great deal of variation in the temperature of the office room; also that the ventilation in the club room was too sluggish. The Secretary agreed to make a detailed record of the temperature for a period of several days so that this matter can be made the subject of further recommendation.

The Membership Committee held one meeting during the month to transact the usual business and assign applications to the various grades of membership.

The Secretary stated that in accordance with action taken at a recent meeting of the Board of Direction to sell the two Pennsylvania R. R. Co. bonds, it would be necessary to pass a new resolution, as the one sent them had not been drawn up in the proper manner. The following resolution was presented and unanimously adopted:

"Resolved, That K. F. Treschow, Secretary, be and he is hereby authorized to sell, assign and transfer two Pennsylvania R. R. Co. 4½ Per Cent. Cons. Mortgage Bonds, due 1960, Nos. 27320-27321."

On motion, the meeting adjourned at 5:15 P. M.

K. F. Treschow, *Secretary.*

CIVIL SECTION—ANNUAL MEETING

The annual meeting of the Civil Section of the Engineers' Society of Western Pennsylvania was held in the Blue Room, William Penn Hotel, Thursday, January 5, at 8:10 P. M., Chairman R. P. Forsberg presiding, 100 members and visitors being present.

The minutes of the last meeting, held May 3, were read and approved.

The annual report of the Section was read by the chairman.

The report of the Nominating Committee was presented by the Secretary as follows:

"To Officers and Members, Civil Section:

Dear Sirs—Your Nominating Committee, appointed to nominate officers for the Civil Section for the ensuing year, met today and nominated the following:

C. S. Davis ..... Chairman

J. F. Laboon ..... Vice Chairman

C. N. Haggart
E. E. Lanpher
H. P. McKown
N. H. Orr
L. J. Riegler
..... Directors

Respectfully submitted,

E. V. Braden, *Chairman,*
J. T. Campbell,
N. B. Jacobs,
Nominating Committee."

On motion, nominations were closed and the Secretary requested to cast a unanimous ballot for the nominees, who were thereupon declared elected.

Mr. Davis, the chairman-elect, then took the chair.

The specifications as finally adopted were printed on the notice and final action was taken. Mr. Davis stated that a few amendments were to be made, as follows:

At the end of paragraph 4, insert: "These proportions are based upon an approved bulking of sand of 20 per cent. due to moisture."

Paragraph 5 to be changed to read as follows: "If inundated sand is used, these proportions shall be suitably adjusted. Pittsburgh sand shows no appreciable bulking when inundated."

A new paragraph to be known as paragraph 18, and paragraphs 18 and 19 to be renumbered as 19 and 20. New paragraph 18 to read: "Paragraph 17 shall not exclude the use of accelerating agents to obtain early high strength nor the use of admixtures to increase workability. Such accelerators or admixtures shall only be used with the approval of the engineer."

On motion, duly seconded and carried, the above amendments were adopted.

On motion, duly seconded and carried, the specfications as amended were adopted as a whole.

No further business coming before the Section, the paper of the evening was presented by J. N. Chester, Consulting Engineer, The J. N. Chester Engineers, Pittsburgh, on "Life in Darkest Africa as Observed by an Engineer."

On motion, duly seconded and carried, a vote of thanks was extended to Mr. Chester for his very interesting and instructive paper.

The meeting adjourned at 11:07 P. M.

K. F. Treschow, *Secretary.*

JOINT MEETING

Electrical Section, Engineers' Society of Western Pennsylvania, and Pittsburgh Section, American Institute of Electrical Engineers

The regular monthly meeting of the Electrical Section of the Engineers' Society of Western Pennsylvania was held jointly with the Pittsburgh Section of the American Institute of Electrical Engineers, Tuesday, January 10, at 8 P. M., Chairman H. E. Dyche presiding, 625 members and visitors being present.

The minutes of the last meeting, held December 13, were read and approved.

The papers of the evening presented were:

"Trans-Atlantic Radio," by Bancroft Gherardi, Vice President, American Telephone and Telegraph Company; President, American Institute of Electrical Engineers.

Symposium on "Alternating Current Network Systems": "Engineering Aspects," by C. T. Sinclair, Assistant Electrical Engineer, Byllesby Engineering and Management Corporation. "Operating Performance," by H. R. Searing, Assistant Electrical Engineer, United Electric Light and Power Company, New York.

A general discussion followed the presentation of the papers.

The meeting adjourned at 10:30 P. M.

K. F. Treschow, *Secretary.*

ILLUMINATING ENGINEERS' SECTION

The regular monthly meeting of the Illuminating Engineers' Section of the Engineers' Society of Western Pennsylvania was held jointly with the Pittsburgh Chapter of the Illuminating Engineering Society in Utility Hall, 435 Sixth avenue, Monday evening, January 16, at 8:15 o'clock, Chairman H. L. Johnston presiding, 60 members and visitors being present.

The minutes of the last meeting, held November 22, were read and approved.

No further business coming before the Section, the paper of the evening, "Home Lighting and Decoration," was presented by A. L. Powell, Manager, Engineering Department, Edison Lamp Works, Harrison, N. J.

A general discussion followed the presentation of the paper.

There was also an inspection trip through the Model Electric Home at Utility Hall.

The meeting adjourned at 10 P. M.

K. F. Treschow, *Secretary.*

ANNUAL MEETING

The forty-eighth annual meeting of the Engineers' Society of Western Pennsylvania was held in the Blue Room, William Penn Hotel, Tuesday, January 17, at 8 P. M., President George T. Ladd presiding, 100 members and visitors being present.

The minutes of the last annual meeting, held January 18, were read and approved.

The annual report of the Board of Direction, which included the reports of the Standing Committees, the Sections and the Treasurer, was read as follows:

REPORT OF BOARD OF DIRECTION

During the year ten meetings of the Board of Direction were held, at which the routine business of the Society was transacted.

During the year there were eight regular and the annual meeting of the Society. The total attendance was 803, the average being 90. The maximum attendance was 275, at the December 13 meeting, and the minimum 12, at the April 19 meeting. There was a general discussion at each of these meetings.

The Board will appreciate comments, either favorable or unfavorable, from the membership at large on the activities of the Society during the past year. You will note from the reports of the Entertainment Committee and Finance Committee that these activities have been greatly increased, and it is only from your comments or criticisms that we can judge whether or not we are giving you the things you desire. This is especially important this year, as we will have to scrutinize the budget for 1928 very carefully in order to keep within our income.

It is interesting to note the steadily increasing number of members taking advantage of the club rooms and also the engineers' luncheon table in the cafeteria. These facilities, together with our other club services, give us practically all the advantages of a club, and we sincerely trust that this year even more of our members will take advantage of what we have to offer.

Respectfully submitted,

K. F. Treschow, *Secretary.*

REPORT OF ENTERTAINMENT COMMITTEE

To the Board of Direction,
Engineers' Society of Western Pennsylvania.

DEAR SIRS:

The following entertainments and inspection trips were held during the year 1927:

January 31—Annual Banquet. Attendance 1092.

February 24—Second Annual Open House and Ladies' Night — Radio Party. Attendance 127.

March 29—Inspection Trip, Homestead Works, Carnegie Steel Company. Attendance 510.

April 18—Ladies' Night—Mathematical Party. Attendance 84.

April 22—Inspection Trip, Consolidated Lamp and Glass Company, Coraopolis, Pa. Attendance 40.

April 30—Seventh Annual Chess Tournament. Cup won by R. S. Bayntun.

June 3 and 4—Long-Distance Inspection Trip, Tri-State Power Meeting, Erie, Pa. Attendance 30.

June 21—Boat Trip, Steamer George Washington. Attendance 600.

September 9—Fourth Annual Golf Tournament, Pittsburgh Field Club. Prizes won by Joseph Bryan, J. S. Lacock and K. F. Treschow. Attendance 54.

October, 1926, to April, 1927—Bridge Tournament. Cups won by L. F. Kuhman and N. D. Moeller.

October 27—Halloween Party. Attendance 85.

Reservations indicate that we will have the largest attendance at the Banquet in the history of the Society.

Respectfully submitted,

T. C. CLIFFORD, *Chairman.*

REPORT OF FINANCE COMMITTEE

To the Board of Direction,
Engineers' Society of Western Pennsylvania.

DEAR SIRS:

In accordance with the established custom, an independent audit of the Society's accounts was made this year by W. B. Hanson, certified public accountant. This audit shows that the statements which have been rendered monthly are correct. A careful study of our finances at this time indicates that, due to increased activities during the past two years, including the formation of two new sections, our expenditures have increased to the point where it is of absolute necessity to keep the dues of the membership collected to date. Our balance of unpaid accounts is much larger than it should be and the committee recommends that the Secretary make a special effort during the first of this year to collect all outstanding accounts. It is only by this means that we can continue to pursue our present activities and balance our accounts at the end of this year.

During the year a careful study of our bond investments was made by the Board of Direction and Finance Committee, with the assistance of the Bond Department of the First National Bank, which resulted in the selling of seven bonds and the purchase of seven new bonds at an increase in revenue and a net profit on the exchange due to market value.

The general financial condition of the Society is sound, with the exception of the falling off in collection of our dues as noted above, and the Com-

mittee earnestly bespeaks the co-operation of the entire membership in the prompt payment of their dues in order that we may continue to give you those services which are essential to the continued growth of our organization.

Respectfully submitted,

J. A. HUNTER, *Chairman.*

REPORT OF HOUSE COMMITTEE

To the Board of Direction,
Engineers' Society of Western Pennsylvania.

DEAR SIRS:

In presenting the annual report of the House Committee, I wish to advise that we had an evening attendance of 4780, which is an increase of 407 over the previous year.

Early in the year the Committee recommended the purchase of an adding machine for use in the office, which recommendation was concurred in by the Board of Direction.

The Committee discussed the question of adequate regulation of temperature and ventilation of the rooms occupied by the Society, taking the matter up with our Secretary, K. F. Treschow, and with the engineer in charge of the hotel. The attention of the Committee was called to the fact that the temperature of the club room was frequently too high for comfort and that there was a great deal of variation in the temperature of the office room. Also, that the ventilation in the club room was too sluggish.

The Secretary agreed to make a detailed record of the temperature for a period of several days so that this matter can be made the subject of further recommendation.

Respectfully submitted,

V. R. COVELL, *Chairman.*

REPORT OF MEMBERSHIP COMMITTEE

To the Board of Direction,
Engineers' Society of Western Pennsylvania.

DEAR SIRS:

Ten meetings of the Committee were held during the year 1927 to assign applications to the various grades of membership and transact any other business coming before the Committee.

Letters were sent to the National Society members of the local sections inviting them to join our Society, and applications were received from eleven A. S. M. E. members, eight from the A. S. C. E., eight from the A. I. E., and eight from the A. I. M. & M. E.

Two hundred and six new members were elected during the year, and the membership as of December 31 was 1705.

The assistance and co-operation of the men making up the Committee are gratefully acknowledged. At the close of the year the membership of the Society was as follows:

Honorary Members	1
Members	1305
Associate Members	193
Associates	81
Juniors	116
Student Juniors	9
	1705

Dropped	34
Resigned	39
Died	21
Accessions	206

Respectfully submitted,

W. L. AFFELDER, *Chairman.*

REPORT OF PUBLICATION COMMITTEE

To the Board of Direction,
Engineers' Society of Western Pennsylvania.

DEAR SIRS:

Three meetings of the Committee were held during the year 1927 to arrange the program for the year, with an average attendance of seven.

Papers presented at the general Society meetings	9
Papers presented at the Section meetings	32

Three meetings of the Practicing Engineers' Section were held at which routine business of the Section was discussed. Also the question of repeal of bill for $5 witness fees was discussed and repeal bill made up.

Twenty-three of the papers presented during the year have been, or will be, printed in the PROCEEDINGS.

Respectfully submitted,

L. C. EDGAR, *Chairman.*

REPORT OF TREASURER

To the Board of Direction,
Engineers' Society of Western Pennsylvania.

DEAR SIRS:

Your Treasurer desires to submit the following report for the year 1927 as follows:

RECEIPTS

Dues Collected	$18,999.91	
Entrance Fees	710.00	
Sale of Advertising Space	5,571.74	
Sale of Magazine PROCEEDINGS	356.85	
Sale of Society Pins	117.00	
Interest on Bonds	965.00	
Interest on Bank Balances	225.49	
Income from Banquet	6,810.00	
Income from Open House Party	265.00	
Ladies' Night Party	126.00	
Sales of Boat Excursion Tickets	704.00	
Inspection Trip Collections	130.90	
Golf Tournament	329.00	
Halloween Party	185.00	
Rental Movie and Slide Machines	50.00	
Refund A. S. M. E. Joint Meetings	216.06	
All-Day Conference	310.50	
Miscellaneous	22.91	
		$36,095.36

DISBURSEMENTS

Administrative and General	$18,032.42	
Cost of Magazine PROCEEDINGS	5,315.56	
Furniture and Fixtures	135.70	
Open House Party	688.85	
Ladies' Night Party	563.50	
Boat Excursions	910.10	
Halloween Party	198.41	
Golf Tournament	473.40	
Erie Inspection Trip	315.03	
Sundry Inspection Trips	101.56	
Sectional Meeting Expense	1,819.20	
Annual Banquet 1927	6,348.75	
Annual Banquet 1928	300.04	
		35,202.52
Excess of Receipts over Disbursements		$ 892.84

CASH ASSETS

	December 31	
	1926	1927
Permanent Fund (Bonds)	$20,127.50	$20,282.50
Cash (Fidelity Title & Trust Company)	849.54	1,599.54
Reserve Fund:		
Cash (Fidelity Title & Trust Company)	2,500.00	2,500.00
General Fund:		
Cash (First National Bank)	246.03	269.10
	$23,723.07	$24,651.14

2 Connellsville Water Co. 5 per cent., 40-year Gold Bonds, Nos. 317-8, maturing October 1, 1939	$ 1,930.00
2 Portsmouth, Berkley & Suffolk Water Co. 5 per cent., 40-year Gold Mtg. Bonds, Nos. 465-6, maturing November 1, 1944	1,980.00
2 Jamison Coal & Coke Co. 5 per cent., 1st Mtg. S. F. Gold Bonds, Nos. 1502-3, maturing May 1, 1931	2,010.00
2 Pennsylvania R. R. Co. 4½ per cent., Cons. Mtg. Issue of 1915 Bonds, Nos. 27320-1, maturing August 1, 1960	2,137.50
3 Jones & Laughlin Steel Co. 5 per cent., Mtg. 30-year Gold Bonds, Nos. 3020-1, maturing May 1, 1939	3,120.00
2 McKeesport Tin Plate Co. 6 per cent., 1st Closed Mtg. 20-year Bonds, Nos. 5773-4, maturing March 1, 1946	2,060.00
4 Wheeling Steel Corp. 5½ per cent. 1st & Refg. Sinking Fund Mtg. Bonds, maturing July 1, 1948, Nos. 533-4, Nos. 8518-9	4,090.00
3 Follansbee Bros. Co. 5 per cent., 1st Mtg. S. F. Gold Bonds, Nos. 788-9-90, maturing June 1, 1947	2,955.00
Total Securities Owned	$20,282.50

I am glad to state that the market value of all bonds owned by the Society has increased in value $155 during the past year.

Respectfully submitted,

A. STUCKI, *Treasurer.*

REPORT OF CIVIL SECTION

To the Board of Direction,
Engineers' Society of Western Pennsylvania.

DEAR SIRS:

I submit herewith a report of the work performed by your Civil Section during the year ended December 31, 1927.

Three meetings were held, one being the annual meeting. The average attendance was 64, the maximum being 72, at the meeting held March 1, and the minimum 51, at the meeting held on May 3. An average of 10 discussed the papers presented. The advisability of holding an all-day session during one of the fall months was thoroughly discussed at several meetings of your Committee, with the result that it was decided to not hold such a session. The following papers were presented:

January 4—Annual meeting. "Recent Trend in Sewage Disposal Developed in Design for Fostoria, Ohio," by J. F. Laboon, Member Firm, J. N. Chester Engineers, Pittsburgh, Pa.

March 1—Report of Committee on "Tentative Specifications for Concrete with Local Aggregates," by C. S. Davis, Chairman of Committee and Consulting Engineer.

May 3—"How We Forecast the Weather," by William S. Brotzman, Meteorologist, Weather Bureau, United States Government, Pittsburgh, Pa.

Respectfully submitted,
R. P. FORSBERG, *Chairman, Civil Section.*

REPORT OF ELECTRICAL SECTION

To the Board of Direction,
Engineers' Society of Western Pennsylvania.

DEAR SIRS:

I wish to report on the work done by the Electrical Section during the year 1927 as follows:

Ten meetings were held during the year, with a total attendance of 3393, the maximum being 480, at the February 8 meeting, and the minimum 132, at the March 22 meeting. A general discussion followed the presentation of all papers. The following papers were presented:

January 11—"The Trend in Large Turbo-Generator Development," by L. P. Peck, American Brown-Boveri Electric Company; W. B. Spellmire, Manager, General Electric Company; and F. D. Newbury, Power Engineering Department, Westinghouse Electric and Manufacturing Company.

February 8—"The Quoddy Tidal Power Project," by Dexter P. Cooper, Dexter P. Cooper, Inc., Eastport, Me.

March 8—"A Mechanical Analogue," by C. L. Fortesque, Manager, Power Transmission and Insulation Department, Westinghouse Electric and Manufacturing Company.

March 22—Annual meeting. "Chicago-Boston Interconnected Transmission Systems," by George S. Humphrey, Electrical Engineer, West Penn Power System.

April 12—"Mercury Arc Rectifiers," by F. E. Faron, Electrical Engineer, General Electric Company, Schenectady, N. Y.

May 10—"Development of Executive and Administrative Ability," by F. J. Chesterman, Vice President and General Manager, Bell Telephone Company of Pennsylvania.

September 13—"Tendencies in Modern Transportation," by N. W. Storer, Construction Transportation Engineer, Westinghouse Electric and Manufacturing Company.

October 11—"Television," by H. M. Stoller and J. W. Horton, Bell Telephone Company.

November 9—"The Modern Oscillograph—the Analyst of the Unknown," by Joseph W. Legg, Supply Engineering Department, Westinghouse Electric and Manufacturing Company.

December 13—"The Engineer vs. the Salesman—Who's Ahead?" by G. M. Gadsby, President, West Penn Power Company.

Respectfully submitted,

W. C. Goodwin, *Chairman.*

REPORT OF ILLUMINATING ENGINEERS' SECTION

To the Board of Direction,
Engineers' Society of Western Pennsylvania.

Dear Sirs:

I submit herewith report of the work done by the Illuminating Engineers' Section during the year 1927.

Three technical meetings of the Section were held during the year, with an average attendance of 75. The maximum attendance was 135, at the November meeting, and the minimum being 16, at the March 11 meeting. A general discussion followed the presentation of the papers.

February 21—"Construction, Operation and Regulation of Automotive Headlights," by R. E. Carlson, Edison Lamp Works, General Electric Company, Harrison, N. J.

March 11—"Natural Lighting," by Professor H. H. Higbie, University of Michigan, Ann Arbor, Mich., and W. C. Randall, Chief Engineer, Detroit Steel Products Company, Detroit, Mich.

April 22—Manufacture of Lighting Glassware. Inspection Trip. Consolidated Lamp and Glass Company, Coraopolis, Pa.

November 22—"Night Flying," by L. C. Porter, Engineer in Charge Aviation Lighting, General Electric Company, Schenectady, N. Y.

Respectfully submitted,

H. L. Johnston, *Chairman, Illuminating Section.*

REPORT OF MECHANICAL SECTION

To the Board of Direction,
Engineers' Society of Western Pennsylvania.

Dear Sirs:

I submit herewith report of the Mechanical Section during the year 1927.

Three meetings of the Section were held, one being the annual and one of the others being an all-day conference, with an average attendance of 96, the maximum being 240 at the October meeting, and the minimum 62, at the February 1 meeting. All meetings were held jointly with the Pittsburgh Section of the A. S. M. E.

February 1—Annual meeting. "Engineering Analysis Applied to Municipal Water Works," by William Shaw, Power Engineer, Mechanical Division, Bureau of Water, City of Pittsburgh.

April 5—"Boiler Control and Combustion Efficiency," by J. F. Shadgen, Engineer, Smoot Engineering Corporation, New York City.

October 17—All-day conference. "High-Pressure Boiler Development," by Dr. D. S. Jacobus, Advisory Engineer, Babcock & Wilcox Company. "High-Pressure Steam Turbines," by G. B. Warren, General Electric Company, Schenectady, N. Y. "Piping, Valves and Fittings for High-Pressure Steam Service," by F. H. Morehead, Chief Engineer, Walworth Company, Boston, Mass.

Respectfully submitted,

J. S. Fulton, *Chairman.*

REPORT OF MINING SECTION

To the Board of Direction,
Engineers' Society of Western Pennsylvania.

Dear Sirs:

The report of the Mining Section is submitted herewith on work done during the year 1927 as follows:

Three meetings of the Section were held, one being the annual meeting and one an all-day conference. There was an average attendance of 90, the maximum being at the October 20 meeting, with an attendance of 215, and the minimum at the March 29 meeting, with an attendance of 21. An average of nine discussed the various papers presented.

January 25—Annual meeting. "Economies of Coal Mining," by N. F. Hopkins, Harrop & Hopkins, Pittsburgh.

March 29—"Face Preparation for Blasting," by B. L. Lubelsky, Explosives Engineer, Pittsburgh Coal Company.

October 20—All-day conference. "Mechanical Loading in the Pittsburgh District," by L. E. Young, Production Vice President, Pittsburgh Coal Company. "Conveyor System of the H. C. Frick Coke Company," by E. C. Auld, Assistant Chief Engineer, H. C. Frick Coke Company, Scottdale, Pa. "Mine Locomotive Gathering and Main-Line Haul," by G. H. Shafter, Commercial Engineer, General Electric Company, Erie Pa.

Respectfully submitted,

C. E. Lesher, *Chairman.*

REPORT OF PRACTICING ENGINEERS' SECTION

To the Board of Direction,
Engineers' Society of Western Pennsylvania.

Dear Sirs:

I wish to submit herewith report of the work done by the Practicing Engineers' Section during the year 1927 as follows:

The annual meeting of the Section was held with an attendance of 14, and a special meeting with an attendance of 12.

Reports of all standing committees were presented at the annual meeting, also question of repeal of bill for $5 witness fee and question of the unconstitutionality of Bill for Registration of Professional Engineers and Land Surveyors.

The special meeting was called to discuss the report of the Publicity Committee presented by Mr. Duckham.

Respectfully submitted,

R. C. Bayne, *Chairman.*

REPORT OF STEEL WORKS SECTION

To the Board of Direction,
Engineers' Society of Western Pennsylvania.

DEAR SIRS:

I wish to submit herewith report of the Steel Works Section of the work done during the year 1927 as follows:

Four meetings of the Section were held during the year, one being the annual meeting. The average attendance was 62, and the maximum attendance was 120, at the December 1 meeting, and the minimum 28, at the February 23 meeting. The average number discussing the papers was seven. The following papers were presented:

February 23—Annual meeting. "Co-Operative Research in Ferrous Metallurgy," by A. C. Fieldner, Superintendent, Pittsburgh Experiment Station, United States Bureau of Mines.

June 14—"Economizers for Boilers," by Walter F. Keenan, Chief Engineer, Power Specialty Company, New York City.

October 25—"Observations on Gas-Producer Operation," by Victor Windett, Chief Inspection Engineer, Wellman-Seaver-Morgan Company, Cleveland, Ohio.

December 1—"Continuous Annealing Furnaces," by F. W. Manker, Vice President, Surface Combustion Company, New York City.

Respectfully submitted,

T. J. McLOUGHLIN, *Chairman.*

REPORT OF GOVERNING COUNCIL

To the Board of Direction,
Engineers' Society of Western Pennsylvania.

DEAR SIRS:

The Governing Council wish to report on work done during the year 1927 as follows:

Three meetings were held, at which matters referred to them were discussed and acted upon.

February 24—Meeting was called to take action on the question of an act establishing a fee of $5 to surveyors subpoenaed as witnesses in Allegheny County. The Practicing Engineers' Section wished this bill repealed and a sub-committee appointed to draw up a repeal bill, which the Governing Council approved.

March 30 and April 6—Meeting called to act on criticism against engineers in the Department of Public Works of Allegheny County. Action taken: Letter written to County Commissioners deprecating statements published in the newspapers regarding the ability and integrity of the engineers in the Department of Public Works.

Respectfully submitted,

GEORGE T. LADD, *Chairman.*

REPORT OF THE TELLERS

To the Members,
Engineers' Society of Western Pennsylvania.

DEAR SIRS:

The undersigned tellers publicly canvassed the ballots in the annual election of officers of the Society at noon, Tuesday, January 17, and wish to report the following:

Ballots received	532
Irregular ballots	8
Ballots counted	524

For President	John A. Hunter	524
For Vice President	W. L. Affelder	516
For Treasurer	A. Stucki	516
For Directors	A. S. Davison	513
	T. J. McLoughlin	515

Respectfully submitted,

J. French Robinson, *Chairman,*
Thomas H. Thorn,
W. F. Sanville, *Tellers.*

The President thereupon declared the following gentlemen elected:

For President	John A. Hunter
For Vice President	W. L. Affelder
For Treasurer	A. Stucki
For Directors	A. S. Davison
	T. J. McLoughlin

Past Presidents George H. Neilson and Harry Lewis escorted the President-elect to the chair.

Past President Ladd: "I take pleasure in presenting to you this gavel and I hope it will give you as great pleasure to serve the Society during the coming year as it has been to me during the past year. I wish you all the success in the world."

President Hunter: "Fellow members of the Society, I feel greatly honored by your putting me in this office and I assure you that I will do everything I can to conduct the affairs of the Society as well as my predecessors have done. But if the Society meets with any success it will be by the combined effort of all the members, and I bespeak from all of you your co-operation and assistance.

Mr. Hunter then appointed A. S. Davison as chairman of the Entertainment Committee, W. E. Fohl as chairman of the Finance Committee, and reappointed the present chairmen of the other committees to serve another year.

No further business coming before the Society, the address of the retiring President was presented by George T. Ladd, President, Ladd Water Tube Boiler Company, Pittsburgh, Pa.

On motion, duly seconded and carried, a vote of thanks was extended to Mr. Ladd for his very interesting paper.

On motion, the meeting adjourned at 9:05 P. M.

K. F. Treschow, *Secretary.*

BOARD OF DIRECTION

The regular monthly meeting of the Board of Direction of the Engineers' Society of Western Pennsylvania was held in the William Penn Hotel, Tuesday, February 21, at 4:10 P. M., President John A. Hunter presiding, Messrs. Affelder, Covell, Davison, Fohl, Davis, Lesher and the Secretary being present, Messrs. Chester, Stucki, Eavenson, Edgar, Fieldner, McLoughlin, Ladd, Goodwin, Dignan, Johnson and Bayne being absent.

The minutes of the last meeting, held January 17, were approved without reading.

Applications from the following gentlemen having been published to the Society, pursuant to the action of the Board, they were elected to membership:

MEMBERS

Brady, Hugh S.
Francis, Charles B.
Keller, John Donald
Quinn, Robert S.

ASSOCIATE MEMBER

Rice, William E.

Applications were received from the following gentlemen and their names ordered published to the Society. Assignment to the various grades of membership is as follows:

MEMBERS

Archer, Arthur A.
Barrett, J. M.
Growdon, J. P.
Nilson, J. Henry
Reed, Chester A.
Reilley, Louis D.
Sangdahl, George Stanley
Schmitz, Edwin Herman
Stafford, Samuel A.
Truax, J. Charlton
Ward, Norman Brewer
Zelditch, Morris

ASSOCIATE MEMBERS

Burton, John Earl
Smerling, Carl

ASSOCIATES

Allen, Lewis C.
Auchmuty, R. Laird
Wills, Felix P.

JUNIOR

Clarke, Henry DeBrunner

The report of the Secretary showing the condition of the finances at the close of business January 31, having been audited by the Finance Committee, was approved.

In connection with the report of the Secretary, Mr. Fohl, chairman of the Finance Committee, reported that the following men had been appointed on this committee: Messrs. Taylor Allderdice, C. E. Lesher and D. D. Pendleton. Further, that a meeting of the committee had been called, at which the general finances of the Society had been considered and the budget prepared. Mr. Fohl then presented the following report:

"One meeting of the committee has been called, at which Messrs. Allderdice and Lesher were, unfortunately, unable to be present. What follows, therefore, must be considered as coming, in the main, from its chairman.

"Preliminary to consideration of the 1928 budget, an examination was made of the report of the auditor, which disclosed the disquieting fact that

the operations of the Society have been conducted at a loss in both the years 1926 and 1927. As shown by the auditor, this loss was $1,713.89 for 1926 and $2,728.01 for 1927. Further examination, however, showed that the loss for 1927 may properly be reduced to $1,678.01 when account is taken of the fact that the auditor's report made no allowance for advance expenditures which had been made for banquet purposes, amounting to $300.00, and that it gave no credit for advertising to the amount of $750.00 earned by THE PROCEEDINGS in 1927, but not collectible at December 31 because of delayed publication.

"Page 4 of the auditor's report shows also that the net worth of the Society, as represented by its surplus, was, at December 31, 1927, $28,271.82—$2,378.01 less than at the same date in 1926.

"An analysis of the 'Accounts Payable' item disclosed that it included $1,700.00 properly chargeable to the operations of 1928; and a re-examination of the 'Accounts Receivable' item, consisting for the most part of unpaid dues, and to which your attention will later be directed, resulted in changing the auditor's figures for them from $5,108.42 to $5,862.01. Adjusted to these figures, the actual surplus, or net worth, is $29,501.42.

"For the purpose of comparison there is here given a comparative statement showing the net worth of the Society and the net loss or gain from operations during the five-year period ending December 31, 1927:

	Net worth.	Net loss or gain from operations.
December 31, 1922	$17,398.20	—$2,103.64
December 31, 1923	24,841.51	+ 869.56
December 31, 1924	30,323.15	+ 5,070.39
December 31, 1925	31,933.72	+ 1,418.07
December 31, 1926	30,649.83	— 1,713.89
December 31, 1927	*28,271.82	— 2,728.01
December 31, 1927	†29,501.42	— 1,678.01

*Auditor's report. †Actual.

"Before proceeding to discussion of the budget, I should like to call attention to the fact that, while the net worth of the Society has been somewhat decreased in the past two years, the decrease is, for the greater part, to be found in the difference between the 'Accounts Payable' and the 'Accounts Receivable' items in our books. There has been no encroachment on our permanent funds, treated in the auditor's report under the caption, 'Designated Funds.' On the contrary, these have been steadily, if slowly, increased, as shown by the following tabulation:

1923	$17,850.96	1926	$23,672.04
1924	20,534.71	1927	24,847.71
1925	21,607.41		

"The budget, which has been prepared for your consideration, will later be explained by Mr. Treschow in detail. Its estimated expenditures, $23,430.00, are almost identical in amount with the actual expenditures for 1927—$23,475.00. It neither curtails any of the activities of the Society as prosecuted in 1927, nor suggests any new ones for 1928. We hope you will agree with us that is in reasonable accord with the probabilities before us in 1928.

"As has been our custom, THE PROCEEDINGS have been separately budgeted, relying on advertising, subscriptions and sales to balance the expenses incurred for their preparation and distribution.

"The auditor's report, on page 12, shows an adverse balance in these particulars for 1927, but Mr. Treschow will later show you figures correcting his findings. We see no reason for varying our previous practice, nor for attempting to secure any markedly greater amount of advertising matter than is now carried.

"Following these explanatory notes, the specific recommendations, emanating from your committee are the following, three in number, whose adoption I shall move separately, after reading them all, thus affording opportunity for presenting any questions or suggestions arising in the minds of the Board:

"1. Presentation to the membership by letter ballot an amendment to the by-laws regulating the payment of dues.

"2. Approval of the proposed budget.

"3. The continuation of the policy of separately budgeting THE PROCEEDINGS, and the securing of sufficient advertising to pay for their preparation and distribution."

After a general discussion, the first recommendation of the committee asking for a letter ballot on an amendment to the by-laws relative to the payment of dues was discussed, and it was regularly moved and carried that this amendment be presented as drawn up by the committee, together with the letter of transmittal accompanying it.

Amendment to by-laws: "Any member whose dues (payable January 1, Aritcle 4, Section 3, of the by-laws) are six months in arrears shall be considered delinquent and shall be so notified by the Secretary. Should such dues not be paid by November 1 following, notification shall be sent the member that his name will be posted in the rooms of the Society unless payment is received by December 31 or written communication stating when payment will be made. Any member whose dues remain unpaid for two years shall be automatically dropped from the rolls of the Society.

"The Board of Direction shall have authority, for reasons deemed sufficient, to extend the time of payment, or remit, in part or in whole, the dues or application of these penalties."

The following letter to be sent with this amendment:

"*To Members of the Society:*

"During the year 1927 the expenditures of the Society exceeded the receipts, even though both items were budgeted the first of the year so that we would have a balance on hand.

"This condition is due to the fact that some of our members have not paid their 1927 dues. The Board of Direction, being anxious to avoid an increase in dues, yet desiring to continue our present services and activities, which are expected and which are necessary to the continued growth of our Society, believes that it must have the co-operation of every member in the prompt payment of his dues. Our dues are low and it is not felt that a burden is being placed on any member in insisting that they be paid promptly.

"Therefore, in order to bring about a realization of the importance and seriousness of this problem, and to insure the future financial standing of the Society, the Board of Direction at its meeting held Tuesday afternoon, February 21, unanimously voted to present the following amendment to Section 2, Article 3. of the by-laws of the Society."

The following budget of expenditures and receipts for 1928 was next presented and, after discussion, it was regularly moved and carried that the budget be adopted:

Detailed Expenditures

Rent	$ 6,775.00
Meeting Expense	2,800.00
Miscellaneous Printing	500.00
Office Expense	2,000.00
Subscriptions	150.00
Social Activities	1,300.00
Auditing	225.00
Society Pins	150.00
Flowers	50.00
Year Book	600.00
Salaries	8,880.00
Total	23,430.00

In this connection it will be noted that a new account has been introduced, i. e., "Meeting Expense." It is planned to include in this amount all expenses accrued to meetings, such as printing, postage, reporting, films or operator, rental, entertainment, speakers' expense, and dinners for Sections. It is planned to allot to each Section the expense which it incurs during the year. All other printing not included for meeting notices will be charged to "Miscellaneous Printing." Major accounts will also be handled for Proceedings, banquet and reprints in the distribution book, although these activities are self-supporting.

Detailed Receipts

The revenue is derived from a list of members as of January 1, viz:

	Resident	Non-resident
Members	1092	221
Associate Members	171	22
Associates	77	6
Juniors	94	23
Student Juniors	7	2
Total	1441	274

The income from this source amounts to		$23,522.00
Less 10 per cent. non-payment of dues		2,352.20
		$21,169.80
Plus other income received during 1927 and expected during 1928, as:		
Interest Received	$1,190.00	
Sales Society Pins	150.00	
Sales Proceedings	500.00	
Profit Net from Banquet	825.00	
		2,665.00
		$23,834.80

This amount will be increased by payment of dues in arrears, of which no amount is shown, to be expected during the current year.

The third item regarding the continuance of the policy of separate budget for Proceedings, advertising to be secured sufficient to pay for its preparation and distribution, was discussed, and it was regularly moved and carried that this policy be continued.

It was regularly moved and carried that the thanks of the Board of Direction be extended to the members of the Finance Committee for their

excellent work in making a study of our finances and the amendment to the by-laws and making up the budget for the ensuing year.

Mr. Fohl presented a letter from the First National Bank calling attention to the fact that our two McKeesport Tin Plate Company bonds had been called for payment March 1 at $103.00.

Attention was called to the fact that Mr. Stucki being away, under existing arrangements with the Pittsburgh Trust Company it would be necessary to await his return before we could dispose of these bonds. In order to prevent a recurrence of this nature, it was regularly moved and carried that the President, Secretary and Treasurer, or any two of these, be authorized to enter the safety deposit box of the Society at the Pittsburgh Trust Company, and, further, that the Pittsburgh Trust Company be notified of this action of the Board of Direction.

The chairman of the Finance Committee was, therefore, authorized to secure these bonds, dispose of them and reinvest the proceeds, together with $1,500.00 cash in the Permanent Fund, which, together with the profit from the sale of recent bonds, would enable us to purchase two additional bonds.

V. R. Covell, chairman of the House Committee, reported an evening attendance of 459 for the month of January.

The Membership Committee held one meeting during the month to go over applications received since the last meeting of the Board and to transact any business coming before the committee.

The Secretary retired from the room while the election of a Secretary took place, and K. F. Treschow was elected Secretary at the same salary.

The meeting adjourned at 5:40 P. M.

K. F. Treschow, *Secretary.*

ANNUAL MEETING—MECHANICAL SECTION

The annual meeting of the Mechanical Section of the Engineers' Society of Western Pennsylvania was held jointly with the Pittsburgh Section of the American Society of Mechanical Engineers in the Blue Room, William Penn Hotel, Tuesday, February 7, at 8:25 P. M., T. A. Peebles presiding as chairman in the absence of Mr. Fulton, 106 members and visitors being present.

The minutes of the last annual meeting, held February 1, were read and approved.

The report of the Nominating Committee was read by the chairman as follows:

To Members and Officers, Mechanical Section:

Dear Sirs—Your Nominating Committee appointed to nominate officers for the ensuing year nominated the following:

G. E. Dignan ..... Chairman
C. A. Carpenter ..... Vice Chairman
W. P. Chandler, Jr.
H. G. McIlvried
Ralph Overton
T. E. Purcell
Van A. Reed, Jr.
..... Directors

Respectfully submitted,

T. A. Peebles, *Chairman,*
R. E. Butler,
William Shaw,
Nominating Committee.

On motion, the nominations were closed and the Secretary instructed to cast a unanimous ballot in favor of the officers named, who were thereupon declared elected.

The chairman-elect, G. E. Dignan, then took the chair.

No further business coming before the Section, the paper of the evening, on "Some Notes on Drop in Temperature and Pressure in Cold-Blast Lines," by James S. Fulton, Special Representative, Ingersoll-Rand Company, Pittsburgh, was read by W. B. Skinkle in the absence of Mr. Fulton.

The ensuing discussion was participated in by: D. E. Cutler, Compressor Specialist, General Electric Company; G. E. Dignan, Chief Engr, Rust Engineering Company; W. N. Flanagan, Special Engr, Carnegie Steel Company; E. P. Jump, Test Engr, Carnegie Steel Company, Duquesne, Pa.; L. E. Riddle, Gen. Supt, Carnegie Steel Company (City Blast Furnaces); W. B. Skinkle, Engr, Power Investigating Committee, U. S. Steel Corporation.

On motion, the meeting adjourned at 9:25 P. M.

K. F. Treschow, *Secretary.*

JOINT MEETING

Electrical Section, E. S. of W. Pa., and Pittsburgh Section, A. I. E. E.

The regular monthly meeting of the Electrical Section of the Engineers' Society of Western Pennsylvania was held jointly with the Pittsburgh Section of the American Institute of Electrical Engineers, Tuesday, February 14, at 8:15 P. M., O. Needham presiding, 100 members and visitors being present.

At 7:30 P. M. a motion picture was shown, after which there were selections by the Philadelphia Harmony Four Colored Quartette.

The paper of the evening, on "The Engineer in Industry," was presented by W. S. Rugg, Vice President, in Charge of Engineering, Westinghouse Electric & Manufacturing Company, East Pittsburgh, Pa.

A general discussion followed the presentation of the paper.

On motion, duly seconded and carried, the meeting adjourned at 10:00 P. M.

K. F. Treschow, *Secretary.*

REGULAR MONTHLY MEETING

The four hundred and fifty-second regular monthly meeting of the Engineers' Society of Western Pennsylvania was held in the Club Rooms, William Penn Hotel, Tuesday, February 21, at 8:15 P. M., President John A. Hunter presiding, 275 members and visitors being present.

The minutes of the last regular meeting, held December 13, were read and approved.

The Board of Direction reported the election of four applicants to the grade of Member; one to the grade of Associate Member, and the receipt of 18 applications for membership. Fifteen resignations were accepted.

No further business coming before the Society, the paper of the evening, on "Design and Construction of the Carquinez Strait Bridge, California," was presented by Dr. D. B. Steinman, Consulting Engineer, New York City, and C. F. Goodrich, Designing Engineer, American Bridge Company, New York City.

A general discussion followed the presentation of the paper.

On motion, duly seconded and carried, a vote of thanks was extended to Dr. Steinman and Mr. Goodrich for their very interesting and instructive paper.

On motion, the meeting adjourned at 11:00 P. M.

K. F. TRESCHOW, *Secretary.*

ANNUAL MEETING—STEEL WORKS SECTION

The annual meeting of the Steel Works Section of the Engineers' Society of Western Pennsylvania was held in the Blue Room, William Penn Hotel, Tuesday, February 28, at 8:15 P. M., Chairman T. J. McLoughlin presiding, 50 members and visitors being present.

The minutes of the last annual meeting were read and approved.

The annual report of the chairman was read by the Secretary.

The report of the Nominating Committee was presented by the Secretary as follows:

To Officers and Members, Steel Works Section:

DEAR SIRS—Your Nominating Committee appointed to nominate officers for the Section for the ensuing year met to-day and nominated the following:

W. B. Skinkle.....Chairman
B. R. Shover .....Vice Chairman
Louis Ellman
C. M. Johnson
D. D. Pendleton .....Directors
W. C. Stevenson
S. S. Wales

Respectfully submitted,

J. S. FULTON, *Chairman,*
L. F. KUHMAN,
D. S. POLHEMUS,
Nominating Committee.

On motion, the nominations were closed and the Secretary instructed to cast a unanimous ballot for the officers named, and they were thereby declared elected.

In the absence of the chairman-elect, Vice Chairman B. R. Shover then took the chair, and no further business coming before the Section, the paper of the evening, on "Some Notes on the Coalescence of Non-Metallic Inclusions in Steel," was presented by Dr. C. H. Herty, Jr., Supervising Metallurgist, Metallurgical Section, U. S. Bureau of Mines, Pittsburgh, Pa.

The ensuing discussion was participated in by: W. P. Bender, Metallurgical Dept., Pittsburgh Crucible Steel Company, Midland, Pa.; S. L. Goodale, Professor of Metallurgy, University of Pittsburgh; C. M. Johnson, Director, Research and Metallurgical Depts., Park Works, Crucible Steel Company of America; Barton R. Shover, Consulting Engineer, Pittsburgh, Pa.; E. S. Taylerson, Engr. Tests, American Sheet and Tin Plate Company; and the author.

On motion, a vote of thanks was extended to Dr. Herty for his very interesting paper.

The meeting adjourned at 9:35 P. M.

K. F. TRESCHOW, *Secretary.*

BOARD OF DIRECTION

The regular monthly meeting of the Board of Direction of the Engineers' Society of Western Pennsylvania was held in the William Penn Hotel, Tuesday, March 20, at 4:20 P. M., Mr. J. N. Chester, Vice President, presiding in the absence of Mr. Hunter, President, Messrs. Affelder, Covell, Davison, Ladd, Davis, Dignan, Skinkle and the Secretary being present, and Messrs. Hunter, Stucki, Eavenson, Edgar, Fieldner, McLoughlin, Fohl, Lesher, Goodwin, Kiefer and Bayne being absent.

The minutes of the last regular meeting, held February 21, were approved without reading.

Applications from the following gentlemen having been published to the Society, pursuant to the action of the Board, were elected to membership:

MEMBERS

Archer, Arthur A.
Auchmuty, R. Laird
Barrett, J. M.
Growdon, J. P.
Nilson, J. Henry
Reed, Chester A.
Reilley, Louis D.
Sangdahl, George Stanley
Schmitz, Edwin Herman
Stafford, Samuel A.
Truax, J. Charlton
Ward, Norman Brewer
Zelditch, Morris

ASSOCIATE MEMBERS

Burton, John Earl
Smerling, Carl

ASSOCIATES

Allen, Lewis C.
Wills, Felix P.

JUNIOR

Clarke, Henry DeBrunner

Applications were received from the following gentlemen and their names ordered published to the Society. Assignment to the various grades is as follows:

MEMBERS

Braun, William Paul
Fitch, George Carroll
Paret, Henry Wilbur, Jr.
Cameron, Harry E.
Weiland, George C.
Wilson, Edward

ASSOCIATE MEMBER

Riddle, Louis M.

ASSOCIATE

Dalzell, C. W.

JUNIOR

Fohl, Edward Zinn

Application for transfer was received from H. E. Passmore and, after discussion, the Secretary was requested to advise him of his transfer to the grade of Member.

Letters of resignation were received from the following and, after discussion, they were ordered accepted: C. J. Freund, T. H. McGraw, Jr, G. W. Quentin and W. M. Riddle.

The Secretary reported the death of the following members:

Erastus Bond .....Joined Mar., 1903 Died Feb. 8, 1928
William Martin ....Joined Jan., 1880 Died Feb. 5, 1928

The report of the Secretary showing the condition of the finances at the close of business February 29, having been audited by the Finance Committee, was approved.

Mr. Davison, Chairman of the Entertainment Committee, reported that the personnel of his committee had been completed with the following: Messrs. J. D. Berg, T. C. Clifford, W. E. Homer, J. T. Miller, H. E. Passmore, Van A. Reed, Jr., and W. B. Spellmire.

He further reported a deficit of $322 for the Annual Open House Party held the latter part of February.

Mr. Covell, Chairman of the House Committee, reported that a meeting of his committee had been held to discuss activities for the coming year and that the question of additional coat racks had been brought up, with the result that the Secretary was instructed to secure prices on two additional racks, which would be reported to the Board at the future meeting.

The ventilation of the rooms was brought up for discussion, a previous conference having been held with Mr. McGarvey with the idea of improving the air in the rooms and making an effort to secure a more even temperature. Mr. Covell stated that since this conference conditions had improved, but that there was still room for further improvement and that another conference would be held with Mr. McGarvey in the near future.

The Membership Committee held one meeting during the month to go over applications and assign them to the various grades of membership and transact any other business coming up for discussion.

The Secretary presented a letter from E. A. Sperry, Chairman of the Committee of the World Engineering Congress to be held in Tokio, Japan, in the fall of 1929. After a general discussion, it was regularly moved and carried that the Secretary be instructed to write Mr. Sperry, acknowleding this invitation with thanks and stating that we will be glad to co-operate in any way possible with this movement.

The Secretary presented several bills received from the American Engineering Council with the request that we take action on them.

1. Bill 1710, providing for the establishment of a National Hydraulic Laboratory in the Bureau of Standards of the Department of Commerce and the construction of a building therefor.

After discussion, it was regularly moved and carried that the Board of Direction go on record as endorsing this bill and that a letter to this effect be sent to Senator D. A. Reed.

2. HR-11026—To provide for the co-ordination of the public health activities of the Government and for other purposes.

It was regularly moved and carried that the Board of Direction of this Society go on record as endorsing this bill and the Secretary be instructed to write our Congressmen to this effect.

3. HR-8111—To provide for an inventory of the water resources of the United States and for other purposes.

After discussion, it was moved and carried that the Secretary be instructed to write our Congressmen, stating that the Board of Direction has gone on record as endorsing this bill.

4. HR-11142—To provide for the topographic mapping and measurement of river discharge of the alluvial valley of the lower Mississippi River and in such other areas as have an immediate bearing on the solution of flood problems of the Mississippi River Basin.

It was regularly moved and carried that the Board of Direction go on record as endorsing this bill and the Secretary instructed to write our Congressmen to this effect.

Mr. Davis brought up the matter of whether or not our Society should consider the subject of welding of structural members, which subject was referred to the Board of Direction by a meeting of the Civil Section and tabled at a subsequent meeting of the Board.

Mr. Davis stated that he felt this matter had not been given consideration and that recently the Engineering Council of the Chamber of Commerce had appointed a committee, who had made a report, urging that the Engineering Council endeavor to secure a change in the present Pittsburgh Building Code permitting welding to be used in certain cases.

After a general discussion, it was moved and carried that a committee of five be appointed by the President from members of the Society competent to study the electrical, mechanical and structural features of electric welding, with the request that they go into this subject thoroughly and report back to the Board as to whether or not they deem it advisable for the Society to endeavor to have the present Building Code of the city changed so as to permit the use of welding.

The meeting adjourned at 5:30 P. M.

K. F. Treschow, *Secretary.*

CIVIL SECTION

The regular bi-monthly meeting of the Civil Section was held in the Blue Room, William Penn Hotel, Tuesday, March 6, at 8:30 P. M., Mr. Forsberg acting as Chairman in the absence of the Chairman and Vice Chairman, 43 members and visitors being present.

The minutes of the last meeting, held January 5, were read and approved.

No further business coming before the Section, the paper of the evening, on "Additions and Alterations to the Kaufman & Baer Company (Now Gimbel Bros.) Store," was presented by C. S. Davis, Consulting Engineer, Pittsburgh, Pa.

The ensuing discussion was participated in by: D. W. Blakeslee, Illg. Engr., Pittsburgh Reflector Co.; H. H. Chidester, Consulting Engr., Erie, Pa.; C. N. Haggart, Consulting Structural Engr.; G. H. Hutchinson, Asst. Designing Engr., Bureau of Bridges and Structures, City of Pittsburgh; F. M. McCullough, Professor Civil Engineering, Carnegie Institute of Technology; G. A. Saeger, Chemical Engr., Crescent-Portland Cement Co., Wampum, Pa.; M. L. Smith, Const. Engr., Fort Pitt Bridge Works and the author.

On motion, duly seconded and carried, a vote of thanks was extended to Mr. Davis for his very interesting paper.

The meeting adjourned at 10:25 P. M.

K. F. Treschow, *Secretary.*

JOINT MEETING

Electrical Section, E. S. of W. Pa., and Pittsburgh Section, A. I. E. E.

The regular monthly meeting of the Electrical Section of the Engineers' Society of Western Pennsylvania was held jointly with the Pittsburgh Section of the American Institute of Electrical Engineers, in the Chamber of Commerce Auditorium, Tuesday, March 13, at 8:20 P. M., J. A. Cadwallader presiding, 350 members and visitors being present.

The reading of the minutes of the last meeting, held February 14, were dispensed with.

No further business coming before the Society, the paper of the evening, on "Vacuum Tube Applications," was presented by T. A. E. Belt, Central Station Engineering Department, General Electric Company.

A general discussion followed the presentation of the paper.

Motion pictures were also shown.

On motion, duly seconded and carried, the meeting adjourned at 10:15 P. M.

K. F. TRESCHOW, *Secretary.*

ILLUMINATING ENGINEERS' SECTION

The annual meeting of the Illuminating Engineers' Section of the Engineers' Society of Western Pennsylvania was held in Utility Hall, Tuesday evening, March 19, at 8:15 P. M., H. L. Johnston, Chairman, presiding, 34 members and visitors being present.

The minutes of the last meeting, held January 16, were read and approved.

The annual report of the Section was presented by the Secretary.

The report of the Nominating Committee was presented as follows:

To Members and Officers Illuminating Engineers' Section:

DEAR SIRS—Have at hand your favor of the 9th advising me that I have been appointed Chairman of the Nominating Committee to formulate the slate for the Engineering Section of the Illuminating Engineering Society of Western Pennsylvania with the concurrence of Messrs. J. G. Allen and S. C. Lovett, who are serving on this committee with me. We have suggested the following names for these offices:

Chairman.....L. J. Kiefer
Vice Chairman .....E. L. Worthington
Directors.....Howard L. Johnston, John A. Hoeveler, Karl A. Staley, L. M. Riddle, A. S. Turner, Jr.

as we believe all of these gentlemen fulfill the necessary requirements—that is, our members of the I. E. S. and the Engineers' Society of Western Pennsylvania.

Very truly yours,

L. W. LOOMIS, *Chairman,*
J. G. ALLEN,
S. C. LOVETT,
Nominating Committee.

On motion, the nominations were closed and the Secretary instructed to cast a unanimous ballot in favor of the officers named, who were thereupon declared elected.

No further business coming before the Section, the paper of the evening, on "The Economies of Good Store and Show Window Illumination," was presented by A. S. Turner, Jr., District Manager, Edison Lamp Works, General Electric Company, Pittsburgh, Pa.

A general discussion followed the presentation of the paper.

The meeting adjourned at 10 P. M.

K. F. TRESCHOW, *Secretary.*

REGULAR MONTHLY MEETING

The four hundred and fifty-third regular monthly meeting of the Engineers' Society of Western Pennsylvania was held in the Blue Room, William Penn Hotel, Tuesday, March 20, at 8:15 P. M., Vice President J. N. Chester presiding in the absence of the President, 45 members and visitors being present.

The minutes of the last meeting, held February 21, were read and approved.

The Board of Direction reported the election of thirteen applicants to the grade of Member, two to the grade of Associate Member, three to the grade of Associate and one to the grade of Junior, and the receipt of nine applications for membership. One member was transferred to the grade of Member, four resignations were accepted, twenty-one dropped, and two deaths reported.

No further business coming before the Society, the paper of the evening, on "Studies of Streses by Means of Polarized Light and Transparencies," was presented by R. V. Baud, Westinghouse Electric & Manufacturing Company, East Pittsburgh, Pa.

The ensuing discussion was participated in by: W. M. Austin, Engr., Westinghouse Elec. & Mfg. Co.; E. C. Carlson, Detailer & Draftsman, Rust Engineering Co.; J. N. Chester, Cons. Engr., J. N. Chester Engineers; R. J. Frank, Chemical Engr., Copperweld Steel Co., Glassport, Pa.; C. P. Fuller, Engr., Koppers Company; E. R. Johnson, Central Alloy Steel Co., Massillon, O.; J. B. Nathanson, Asst. Professor Physics, Carnegie Institute of Technology; L. H. Nelson, Central Alloy Steel Co.; R. Sergenson, Central Alloy Steel Co.; and the author.

On motion, duly seconded and carried, the meeting adjourned at 10:10 P. M.

K. F. Treschow, *Secretary.*

ANNUAL MEETING—MINING SECTION

The annual meeting of the Mining Section of the Engineers' Society of Western Pennsylvania was held in the Blue Room, William Penn Hotel, Tuesday, March 27, at 8 P. M., Vice Chairman L. O. Lougee presiding in the absence of the Chairman, 150 members and visitors being present.

The minutes of the last meeting, held October 20, 1927, were read and approved.

The annual report of the Chairman was presented by the Secretary.

The report of the Nominating Committee was presented as follows:

To Officers and Members Mining Section:

Dear Sirs—A meeting of your Nominating Committee to nominate officers for the Section for the ensuing year met today and nominated the following:

Chairman.....L. O. Lougee
Vice Chairman.....J. A. Malady
Directors.....Joseph Bryan, T. W. Dawson, M. E. Haworth, G. F. Osler, L. E. Young

Yours truly,
N. G. Alford, *Chairman,*
W. L. Affelder,
N. F. Hopkins,
Nominating Committee.

On motion, the nominations were closed and the Secretary instructed to cast a unanimous ballot for the officers named, who were thereupon declared elected.

No further business coming before the Section, the paper of the evening, on "Review of the Coal Situation," was presented by L. E. Young, Vice President, Pittsburgh Coal Company, in the absence of Mr. Lesher.

The meeting adjourned at 10:17 P. M.

K. F. Treschow, *Secretary.*

BOARD OF DIRECTION

The regular monthly meeting of the Board of Direction of the Engineers' Society of Western Pennsylvania was held in the William Penn Hotel, Tuesday, April 17, at 4:15 P. M., President John A Hunter presiding, Messrs. Chester, Edgar, Covell, Eavenson, Davison, Ladd, Davis, Dignan, Lougee, Skinkle, Pinkerton and the Secretary being present, and Messrs. Affelder, Stucki, Fieldner, McLoughlin, Kiefer, Fohl and Bayne being absent.

The minutes of the last regular meeting, held March 20, were approved without reading.

Applications from the following gentlemen having been purblished to the Society, pursuant to the action of the Board, were elected to membership:

MEMBERS

Braun, William Paul
Cameron, Harry E.
Fitch, George Carroll
Weiland, George C.
Paret, Henry Wilbur, Jr.
Wilson, Edward

ASSOCIATE MEMBER

Riddle, Louis M.

ASSOCIATE

Dalzell, C. W.

JUNIOR

Fohl, Edward Zinn

Applications for membership were received from the following gentlemen and their names ordered published to the Society. Assignment to the various grades is as follows:

MEMBERS

Duff, John Martin
Paddock, Leon Alfred
Studybaker, Aaron Daniel

ASSOCIATE

Swartz, Charles A.

Applications for reinstatement were received from the following and, after discussion, they were reinstated to membership: G. F. Bain and J. A. Knesche.

Applications for transfer were received from the following and, after discussion, they were transferred to the grade of Member: H. P. McKown and R. W. Rowland.

Resignations were received from the following and, after discussion, they were ordered accepted: A. F. Brosky, H. W. Brooks, H. C. Ihsen and P. G. McVetty.

The report of the Secretary showing the condition of the finances at the close of business March 31, having been audited by the Finance Committee, was approved.

The House Committee reported an evening attendance of 446 for the month of March.

The Membership Committee held one meeting to go over applications received since the last meeting of the Board and to act on any other business coming before the committee.

After a general discussion as to ways and means of increasing the membership of the Society during the coming year, the following plans were suggested: It was recommended that we again send a letter to the members of the four founder societies located in Pittsburgh calling their attention to our special arrangements for the remission of their entrance fee and the signing of the special card rather than filling out the usual form of application.

It was also suggested that the Secretary write all the principal engineering colleges and universities in the country, securing their list of alumni, and that this be checked up with our membership and list of non-members made up, and that these names be divided among the alumni of the various schools who are members of the Society, asking them to sign a personal letter to be written by the Society's office calling attention to our activities and the value of membership in the Society.

The suggestion was also made that early in the fall the committee be divided into groups of two each, with the idea of calling on several of the executives of the larger companies in Pittsburgh, calling their attention to the value of membership to their men and asking their co-operation in bringing the Society to the attention of their engineering department.

After a general discussion, it was moved and carried that the Secretary secure a list from the colleges as suggested, and that the list of non-members be made up during the summer months in order that the committee may have the list to start on early in the fall.

The Secretary reported that the result of the letter ballot changing the By-Laws, Article 4, Section 3, was as follows: Total votes cast, 225; in favor of, 221; against, 4. It was regularly moved and carried that this amendment be put into effect as stated in the announcement.

The meeting adjourned at 4:40 P. M.

K. F. Treschow, *Secretary.*

MECHANICAL SECTION

An all-day conference of the Mechanical Section of the Engineers' Society of Western Pennsylvania was held jointly with the Pittsburgh Section of the American Society of Mechanical Engineers on Tuesday, April 3, at 9:30 A. M., Chairman G. E. Dignan presiding, 166 members and visitors being present.

The reading of the last minutes of the Section were dispensed with.

The following papers were presented: "Four High Mills and the Development of Their Rolling Practice," by F. C. Biggert, Jr., President, United Engineering & Foundry Company; "Development and Application of Timken Tapered Roller Bearings for Steel Mill Equipment," by Fred Waldorf, District Manager, Steel Mill Division, Timken Roller Bearing Company, Canton, O.; and "The Construction and Operation of Kathner Normalizing Furnaces," by C. P. Mills, Chief Engineer, The Duraloy Company, Pittsburgh.

Discussion on Mr. Biggert's paper was participated in by: C. G. Bigelow, Research Engr., Inland Steel Co.; G. E. Dignan, Chief Engr., Rust Engineering Co.; I. W. Frank, Chairman Executive Committee, United Engrg. & Fdry. Co.; A. T. Kathner, The Duraloy Co.; W. W. Macfarren, Mech. Engr. Oakmont, Pa.; N. D. Moeller, Mech. Engr., Koppers Construction Co.; Barton R. Shover, Cons. Engr., Pittsburgh; G. E Stoltz, Mgr., Industrial Engineering, Westinghouse Elec. & Mfg. Co.; and the author.

Discussion on Mr. Waldorf's paper was participated in by: C. G. Bigelow, Research Engr., Inland Steel Co.; F. C. Biggert, Jr., Pres., United Engrg. & Fdry. Co.; W. W. Macfarren, Mech. Engr., Oakmont, Pa.; S. M. Weckstein, Ind. Equipment Engr., Timken Roller Bearing Co.; Barton R. Shover, Cons. Engr., Pittsburgh; W. B. Skinkle, Engr., Power Investigating Committee, U. S. Steel Corp.; G. E. Stoltz, Mgr., Industrial Engineering, Westinghouse Elec. & Mfg. Co.; and the author.

Discussion on Mr. Mills' paper was participated in by: E. Buschow, Sales Engr., Surface Combustion Co.; G. E. Dignan, Chief Engr., Rust Engineering Co.; L. W. Haag, Chief Engr., Apollo Steel Co.; A. T. Kathner, The Duraloy Co.; Julian Kennedy, Jr., Julian Kennedy, Engineer; C. L. Longenecker, Editor, *Blast Furnace and Steel Plant*; Theodore Lutz, Superior Steel Co.; L. B. McMillen, Cons. Engr, Johns-Manville Corp., New York City; O. D. Rice, Engr., Rust Engineering Co.; L. Vayda, Bacharach Industrial Instrument Co.; and the author.

On motion, duly seconded and carried, a vote of thanks was extended to the authors for their excellent papers.

The meeting adjourned at 3:50 P. M.

K. F. Treschow, *Secretary.*

ANNUAL MEETING—ELECTRICAL SECTION

The annual meeting of the Electrical Section of the Engineers' Society of Western Pennsylvania was held jointly with the Pittsburgh Section of the American Institute of Electrical Engineers in the Chamber of Commerce Auditorium, Tuesday, April 10, at 7:45 P. M., Chairman E. C. Stone presiding 237 members and visitors being present.

The minutes were approved without reading.

The annual report of the Section was read by Mr. Stone.

The report of the Nominating Committee was presented as follows:

To Officers and Members Electrical Section,
Engineers' Society of Western Pennsylvania:

Dear Sirs—Your Nominating Committee appointed to nominate officers for the ensuing year met today and nominated the following:

Chairman	A. Pinkerton
Vice Chairman	J. I. Alexander
Directors	H. E. Dyche
	D. M. Simons
	R. E. Uptegraff
	Paul Caldwell
	J. L. McK. Yardley

Respectfully submitted,

G. S. Humphrey, *Chairman,*
G. W. Ousler,
L. R. Botsai,
Nominating Committee.

On motion, the nominations were closed and the Secretary instructed to cast a unanimous ballot for the officers named, who were thereupon declared elected.

No further business coming before the Section, the paper of the evening, on "Arc Phenomena," was presented by Dr. Joseph Slepian, Consulting Engineer, Westinghouse Electric & Manufacturing Company.

A general discussion followed the presentation of the paper.

On motion, the meeting adjourned at 10:40 P. M.

K. F. Treschow, *Secretary.*

MINING SECTION CONFERENCE

An all-day meeting of the Mining Section of the Engineers' Society of Western Pennsylvania was held in the Blue Room, William Penn Hotel, Thursday, April 12, at 10 A. M. In the absence of the Chairman, M. D. Cooper presided, 137 members and visitors being present.

The reading of the minutes of the last meeting, held March 27, were dispensed with.

The paper presented was a symposium on "Review of Requirements for the Design and Operation of Electrical Equipment for Gassy Mines, with Special Reference to Motors and Their Control." by L. C. Ilsley, Supervising Engineer, Electrical Division, U. S. Bureau of Mines, Pittsburgh, Pa.

The ensuing discussion was participated in by: R. C. Beerbower, Coal Mine Equipment Co.; E. E. Boon, Mixed Apparatus Sales, Westinghouse Elec. & Mfg. Co.; Graham Bright, Sales Engr., Mine Safety Appliances Co.; Mr. Brown, Jeffrey Mfg. Co.; H. B. Brunot, Assoc. Elec. Engr., U. S. Bureau of Mines; H. P. Chandler, Mining Dept., Ohio Brass Co., Mansfield, O.; M. D. Cooper, Asst. Gen. Supt., Hillman Coal & Coke Co.; L. F. Crawford, Partner, Coal Mine Equipment Co.; F. B. Dunbar, Gen Supt., Hillman Coal & Coke Co.; Mr. Dunlap, Jeffrey Mfg. Co.; T. G. Fear, Production Mgr., Consolidation Coal Co., Inc.; E. J. Gleim, Assoc. Elec. Engr., U. S. Bureau of Mines; Mr. Gleason, Joy Mfg. Co.; Thomas Gray, Asst. Supt., Electrical Equipment, Pittsburgh Coal Co.; E. H. Johnson, Chief Engr., The Coloder Company; Mr. Kingsland, Consolidation Coal Co., Inc.; A. B. Kiser, Elec. Engr., Pittsburgh Coal Co.; J. A. Malady, Mech. & Elec. Engr., Hillman Coal & Coke Co.; A. J. Oakes, South Forks Machinery Co.; W. G. Taylor, Industrial Dept., General Electric Co.; W. D. Turnbull, Elec. Engr., General Engineering Dept., Westinghouse Elec. & Mfg. Co.; and the author.

It was moved and carried that the Chairman of the Section appoint a special committee to represent the Bureau of Mines, manufacturers and operators, to work up data on permissible equipment, having regard to the different conditions that exist in different states, and that the committee report back at a subsequent meeting of the Section.

On motion, duly seconded and carried, the meeting adjourned at 2:50 P. M. K. F. Treschow, *Secretary.*

REGULAR MONTHLY MEETING

The four hundred and fifty-fourth regular monthly meeting of the Engineers' Society of Western Pennsylvania was held in the Blue Room, William Penn Hotel, Tuesday, April 17, at 8:18 P. M., President John A. Hunter presiding, 30 members and visitors being present.

The minutes of the last meeting, held March 20, were read and approved.

The Board of Direction reported the election of six applicants to the grade of Member, one to the grade of Associate Member, one to the grade of Associate, and one to the grade of Junior; also the receipt of four applications for membership. There were two reinstatements, transfer to higher grade of one member, and four resignations accepted.

No further business coming before the Society, the paper of the evening, on "Fundamentals of Electric Service for the Home," was presented by Samuel S. Wyer, Consulting Engineer, Columbus, Ohio.

A general discussion followed the presentation of the paper.

On motion, duly seconded and carried, a vote of thanks was extended to Mr. Wyer for his very interesting and instructive talk.

No further business coming before the Society, the meeting adjourned at 9:45 P. M. K. F. Treschow, *Secretary.*

REGULAR MONTHLY MEETING

The four hundred and fifty-fifth regular monthly meeting of the Engineers' Society of Western Pennsylvania was held in the Blue Room, William Penn Hotel, Tuesday, June 19, at 8:15 P. M., President John A. Hunter presiding, 45 members and visitors being present.

The minutes of the last meeting, held May 29, were read and approved.

The Board of Direction reported the election of seven applicants to the grade of Member, three to the grade of Associate and one to the grade of Junior, and the receipt of six applications for membership. There were two transfers to higher grades.

No further business coming before the Society, the paper of the evening, on "Facts Regarding the Corrosion of Metals," was presented by J. P. Butterfield, Development Engineer, the American Rolling Mill Company, Middletown, Ohio.

A general discussion followed the presentation of the paper.

On motion, duly seconded and carried, a vote of thanks was extended to Mr. Butterfield for his very interesting and instructive paper.

On motion, the meeting adjourned at 11:45 P. M.

K. F. Treschow, *Secretary.*

BOARD OF DIRECTION

The regular monthly meeting of the Board of Direction of the Engineers' Society of Western Pennsylvania was held in the William Penn Hotel, Tuesday, September 18, at 4 o clock, President John A. Hunter presiding, Messrs. C. S. Davis, A. Pinkerton, W. B. Skinkle, V. R. Covell, G. T. Ladd, J. N. Chester and L. C. Edgar being present, and Messrs. W. E. Fohl, W. L. Affelder, A. Stucki, H. N. Eavenson, A. S. Davison, T. J. McLoughlin, G. E. Dignan and L. O. Lougee being absent.

The minutes of the last regular meeting, held June 19, were approved without reading.

Applications from the following gentlemen having been published to the Society, pursuant to the action of the Board, were elected to membership:

MEMBERS

Christie, L. R.
Morgan, Howard M.
Neill, Benjamin Elmer
Stroh, Charles Kirk

JUNIORS

Robinson, John Chalmers
Peterson, Harry O.

Applications for membership were received from the following gentlemen and their names ordered published to the Society. Assignment to the various grades is as follows:

MEMBERS

Carlock, John Bruce
Frederick, Paul
Girdler, Tom Mercer
Graham, Herbert W.
Grimm, Bruce Fulton
Renshaw, David E.
Schroeer, Roy A.
Schultz, Herbert A.

ASSOCIATE MEMBERS

Berger, Newell James
Carter, Edgar Levis
Ingham, Frank

ASSOCIATES

Johnson, Carl F.
Robey, Harry F.

JUNIOR

Dougall, Charles Raymond, Jr.

STUDENT JUNIOR

Logatello, P. E.

The Secretary reported the death of F. H. Parke, who joined the Society in February, 1914, and died June 18, 1928; also W. Dyrssen, who joined the Society February, 1926, and died August 4, 1928.

V. R. Covell, Chairman of the House Committee, reported an evening attendance of 1159 for the months of June, July and August.

In the absence of Mr. Affelder, Chairman of the Membership Committee, the Secretary reported for the Committee that one meeting had been held during the month to go over applications received since the last meeting and make assignment to the various grades of membership and transact any other business of the Committee. He also reported that plans were made for a drive to secure new members by securing alumni lists of all the engineering schools throughout the country and asking local graduates who are members of the Society to write the men in their school in this locality, inviting them to become members of the Society. This will require an additional amount of work in the office, and the Committee recommends that the Secretary be authorized to secure outside assistance to carry out this work.

After a discussion, it was moved and carried that the Secretary be authorized to carry out these plans and secure the necessary assistance.

Mr. Edgar, Chairman of the Publication Committee, requested the Secretary to give a brief outline to the members of the Board of the plans the Committee had worked out for a series of lectures for our regular monthly meetings during the coming year. The Secretary briefly outlined a suggested lecture course including four speakers of international prominence, who could be secured through the Neilson Bureau at a cost of $950. He stated that this action had been taken by the Committee for a complete change in type of program due to the fact that our attendance for the past few years had indicated that our present speakers and subjects were not attracting the interest they should. The Committee believes this change is desirable for the best interests of the Society and, further, that a minimum charge should be made to cover the expense of securing these speakers. After a general discussion, it was regularly moved and carried that the plan of the Publication Committee be approved and that the details of financing be left to the Committee.

The Secretary presented a letter from L. W. Wallace, Executive Secretary of the American Engineering Council, to which he accepted, on behalf of the Council, our invitation to hold their fall directors' meeting in Pittsburgh and suggested the dates of October 19 and 20. It was regularly moved and carried that the President be authorized to appoint a special committee to assist in the entertaining of these visitors and, further, that a subscription dinner be arranged by this committee for Friday evening, October 19.

The Secretary presented an ordinance for the creation of a Fire Division in the Department of Public Safety in the City of Pittsburgh. This ordinance was brought to our attention by the Chamber of Commerce. After a general discussion, it was moved and carried that the President appoint a committee to study this ordinance and report back to the Board.

The meeting adjourned at 6 P. M.

K. F. Treschow, *Secretary.*

BOARD OF DIRECTION

The regular monthly meeting of the Board of Direction of the Engineers' Society of Western Pennsylvania was held in the French Room, William Penn Hotel, Tuesday afternoon, November 20, at 4 o'clock, President John A. Hunter presiding, Messrs. H. N. Eavenson, L. C. Edgar, V. R. Covell, W. E. Fohl, C. S. Davis, G. E. Dignan, L. O. Lougee and W. B. Skinkle being present, Messrs. W. L. Affelder, A. Stucki, G. T. Ladd, J. N. Chester, A. S. Davison, T. J. McLoughlin and A. Pinkerton being absent.

The minutes of the last regular meeting, held October 16, were approved without reading.

Applications from the following gentlemen having been published to the Society, pursuant to the action of the Board, were elected to membership:

MEMBERS

Boyd, W. Wallace
Bulmer, W. O.
Dent, John Adlum
Helick, R. H.
LeBon, Charles Benoit
Little, Samuel Guy
Neah, Arthur
Shirk, W. B.
Wunder, Edgar D.

ASSOCIATE MEMBERS

Anderson, Burt T.
Ilfeld, Max L.
Mathieu, Henry P.
McCracken, C. K.

JUNIORS

Frys, D. W., Jr.
Kalbach, W. R.
Snyder, L. W.

Applications for membership were received from the following gentlemen and their names ordered published to the Society. Assignment to the various grades is as follows:

MEMBERS

Allen, J. Wallace
Bathgate, O. H.
Bohn, Donald I.
Brown, H. V.
Candy, A. M.
Coslow, C. W.
Deuel, H. A.
Ehrhart, R. N.
Eichley, R. O.
Emory, G. W.
Emrick, A. B.
Griffiths, E. McC.
Irvin, W. A.
Lloyd, F. J.
McKenna, Roy C.
Haines, W. L. R.
Nelson, J. A.
Rassbach, R. W.
Rockwell, W. L.
Unrue, Albert
Wheeler, W. S.
Wray, D. C.
White, J. C.

ASSOCIATE MEMBERS

Cowin, Stuart H.
Danahy, John
Evarts, Ralph E.
MacGregor, J. R.
Nagin, H.
O'Neill, A. D.
Roy, R. J.
Van Sickel, E. L.

ASSOCIATES

Buys, Orville
Childs, H. P.

JUNIORS

Bates, R. P.
Carlson, C. E.
Giroux, F. J.
Flynn, F. E.

STUDENT JUNIOR

Britton, J. R.

Resignations were received from V. C. Ward and John C. White and, after discussion, they were ordered accepted.

The report of the Secretary showing the condition of the finances at the close of business October 30, having been audited by the Finance Committee, was approved.

V. R. Covell, chairman of the House Committee, reported an evening attendance of 302 for the month of October.

Mr. Covell also reported that in accordance with action taken at the special meeting of the Board held jointly with the House Committee on November 1, he had confererd with the hotel, stating it was the opinion of the Board that we retain our present location in the hotel, with the change of location for the offices and coat room, as given in the plans submitted, with the recommendation that the coat room be moved from its location, as given, to the other end of the room in order to permit the members the use of the room without going across the club room. Mr. Covell further stated that the hotel had at this time submitted another plan, suggesting that we reconsider the third floor location with the idea of arranging it unfurnished. This, they informed us, would reduce the rent about $2,000 a year, which would make a total of approximately $10,000 a year unfurnished, or $12,000 furnished. The chairman stated that the two meetings of the House Committee had been held to consider this suggestion and that the committee almost unanimously were in favor of moving to the third floor, securing the rooms unfurnished, with the suggestion that money be raised for the purchase of furniture through the industries in this district. The President called for a discussion on this subject, and it was regularly moved and carried that the action taken at the special meeting of the Board, endorsing our present location, be made final. During the discussion of quarters the general opinion seemed to be that the Society could not afford to move to the third floor. The chairman of the House Committee and other members of the Board stated that they had discussed this with various members of the Society and the majority seem to favor our present location. Special attention was called to the ventilation problem and the committee was instructed to discuss this with the hotel and secure definite assurance from them that the present condition of ventilation would be corrected before signing a new lease.

The suggestion was also made that the committee secure additional space back of the suggested office, rearranging the entire plan so as to include a reading room. It was finally moved and carried that the House Committee be authorized to sign a lease for our present quarters with the arrangement and suggestions, as indicated above, included.

The Membership Committee held one meeting to go over applications received since the last meeting of the Board and to act on any other business coming before the committee.

Mr. Edgar, chairman of the Publication Committee, reported that the first of our lectures had been successful from the standpoint of attendance and tickets for the entire course had been sold, amounting to about $550, leaving a balance to be raised of $400. The chairman urged that the members of the Board and chairmen of the various sections co-operate, with the view of assisting to dispose of additional tickets by calling these lectures to the attention of their friends in order that this additional amount be raised.

The Secretary reported, on behalf of the Entertainment Committee, that arrangements were under way for the Annual Dinner and the committee hoped to have a definite report for the December meeting of the Board.

In accordance with Article V, Section V, of the By-Laws, the report of the Nominating Committee was presented as follows:

President	John N. Chester
Junior Vice President	Louis C. Edgar
Treasurer	Arnold Stucki
Directors	Carl E. Lesher William B. Skinkle

It was regularly moved and carried that these nominations be approved and the Secretary instructed to publish their names to the Society.

The Secretary presented a letter from Mr. Danforth regarding the Uniform Mechanic Lien Act sent him by the Board of Direction for his recommendation. Mr. Danforth commented as follows:

> "The principal comment which the writer would make is contained in Section VI of the Supplement to Second Tentative Draft, dated April 1928, lines 21, 22 and 23, wherein, in italics, is the following:
>
> > 'but a statement under oath by the contractor that payment has been made to lienor shall be accepted by the owner in lieu of such waiver or receipt as sufficient evidence of such payment.'
>
> My personal and individual opinion is that nothing except a written waiver of lien, or a written receipt, showing the money actually paid should serve as a release.
>
> "While the owner should not be put in the position of serving as a collection agency, nevertheless there are so many men engaged in the building and construction business who are practically doing business on the credit supplied by the financial stability of the owner that it hardly seems fair that after filing notice of non-payment all claims should be swept aside by a simple affidavit, which, even though it may be in good faith, would still be in error. To my mind, the fundamental idea of a mechanics' lien is to protect the rights of all interested as an equity proceeding and, as such, a case should be thoroughly investigated before it is dismissed.
>
> (Signed) "G. H. Danforth."

It was regularly moved and carried that Mr. Danforth's recommendation be approved and the Secretary was instructed to write the American Engineering Council to this effect.

Mr. Covell brought up the question of the preparation of a charter for the Metropolitan District to be presented to the Legislature of the State of Pennsylvania next January, suggesting that our Society co-operate with the various groups now being formed to prepare this document.

After a general discussion, it was regularly moved and carried that the chairman of the Civic Affairs Committee be instructed to write Joseph T. Miller, chairman of the Metropolitan Commission, stating that our Society would be glad, through a committee, or representative, to assist them in any possible way in this work.

The Secretary presented a letter from E. F. Wendt, a member of the Society residing in Washington, in which he called attention to the recent meeting of the American Engineering Council in Pittsburgh and stating that

he hoped, as a member of the Society, that the Board of Direction would decide to join the American Engineering Council. The President stated that this recommendation had been made at a dinner held by the Council and that he would be glad to entertain a motion for the appointment of a special committee to consider this subject.

It was regularly moved and carried that the President be instructed to appoint a committee from the membership of the Board to consider the advisability of our Society joining the Federated American Engineering Societies, this meeting to report at the subsequent meeting of the Board.

The meeting adjourned at 5:30 P. M.

K. F. Treschow, *Secretary.*

Form 45

620.6 En 3
v.44
Engineers' soc.of western
Penna. 1928-1929

233787

Form 47

620.6 En 3
v.44

PENNSYLVANIA STATE LIBRARY
Harrisburg

233787

In case of failure to return the books the borrower agrees to pay the original price of the same, or to replace them with other copies. The last borrower is held responsible for any mutilation.

Return this book on or before the last date stamped below.